

Cold-In-Place-Recycling

RT-500

Cold-In-Place Recycle Trailer

- 500 TPH (453 MTPH)
- KPI Model 50-488 Pugmill
- Telsmith Crusher Impactor 3048 HSI
- JCI 5142-24 "LP" Screen

ROADTEC
an Astec Industries Company

THE ROADTEC DIFFERENCE





Our Customers

"I have to give Roadtec credit, because they're the best people I've seen in terms of supporting their equipment."

"Handling asphalt is tough on machines, but Roadtec equipment holds up. Roadtec designs stuff to do the job."

"We've got some Roadtec pavers with well over 10,000 hours on them. Some of those still have the original engines."

"They're exceptional about support, whether it's parts or other issues."



Count on Roadtec Equipment & customer service

Dependability

Roadtec has been manufacturing innovative, heavy-highway equipment since 1981. We continue to grow and add new products, yet our personal connection to our customers and our ability to respond immediately to your needs is even stronger.

Longevity

Roadtec supplies equipment globally. Our products can be found in every part of the world. Road builders everywhere are encouraged to visit our website at roadtec.com, where they will find the local Roadtec contact for their region. Roadtec equipment is designed with longevity and reliability as the focus because we realize that this is the most important factor for our customers' success.

Partnership

At Roadtec, we understand that our success hinges on the success of the customer. To accomplish this common goal, we focus on building reliable, long lasting machines that consistently perform at the highest level. Roadtec is dedicated to giving the customer every advantage to excel in the field.

Crews Like Roadtec

Our customers experience minimal downtime, and their crews are comfortable with Roadtec equipment. That's reflected in the quality of work they do.

Any good crew familiar with us and other brands will prefer Roadtec because equipment operators achieve better ride smoothness, the machines have lower maintenance costs, and the design is user-friendly. That makes operators more comfortable and confident with the equipment.

ADVANTAGES



Cold-In-Place-Recycling: Cost-Effective & Environment-Friendly

Roadtec cold-in-place recycling (CIR) equipment makes it possible to repair damage to a roadway in one single pass, while reusing up to 100% of the existing material. Savings potentials are tremendous, not only through re-use of material, but also by reducing equipment requirements, and through time savings. CIR technology allows making of mix right there at the job site. No haul trucks are running back and forth to the asphalt plant; very little virgin material, if any, is used; and you can open the road to traffic very quickly.

CIR is the Future of Road Rehabilitation

Roadtec has been developing and refining this technology over many years and offers a number of equipment configurations to help you meet your goals. The basic concept of CIR is to remove damaged layers, to process the removed material, and then to place it and compact it to make the new structure. A new surface course can then be applied.





Cold-In-Place Recycling Makes the Most Effective Crack Barrier

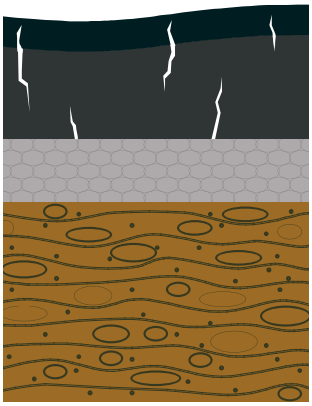

With only a new overlay ruts improve somewhat but cracks migrate through.

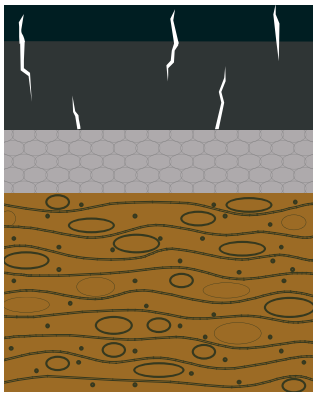

Milling and then overlaying fixes rutting but cracks still come through.

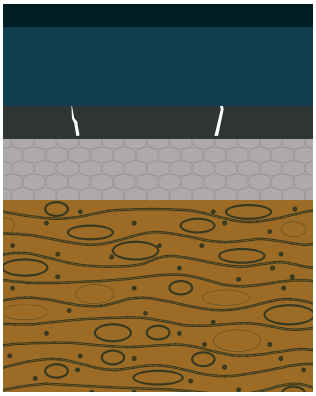

The CIR layer acts as a crack barrier. CIR has relatively high air void content and therefore cracks don't transfer through.

SAVINGS



Milled up old pavement is fed into the RT-500 cold recycler to be made into new mix. All aggregate needed is picked up from the old pavement.

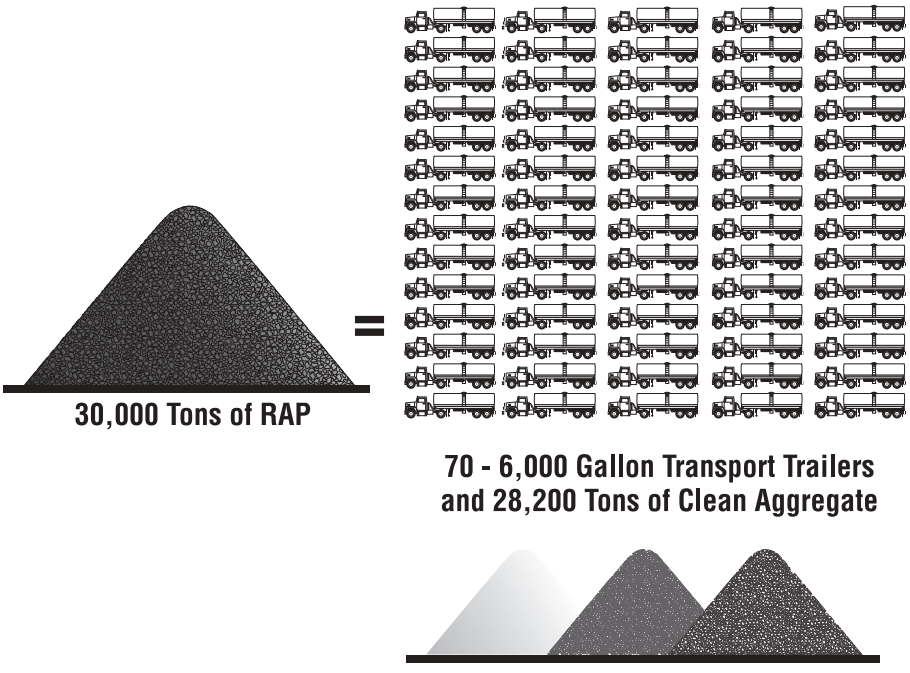

Recycled Asphalt Pavement is worth what it replaces.

Cost Saving Factors

- Time
- Hauling cost
- Raw Materials
- Manpower
- Fuel
- Energy



Fix It Fast. Fix It Now.

CIR can repair fatigue (alligator) cracking, bleeding (of excess liquid asphalt), block cracking, corrugation and shoving, joint reflective cracking, longitudinal cracking, patching, polished aggregate, potholes, raveling, rutting, slippage cracking, stripping, and transverse (thermal) cracking. The root cause of the pavement failure should always be investigated to rule out base failure. Other determining factors include the traffic volume and the loads the roadway should support. CIR can and has been used successfully on high-traffic- volume roads but may require a thicker overlay.

CIR Can Address All Types of Pavement Distress in an Economical Way

If a road has good structural strength, then CIR can be an effective treatment for all types of cracking, ruts and holes in the asphalt layer. It is not necessary to remove all of the old asphalt. Usually the treatment is applied to a depth of 2 - 4 inches (5 - 10 cm). Only a thin overlay or chip seal is required as a wearing course for most projects.

When is CIR the Best Way to Go?

If there's no damage to the base, you can consider CIR. All types of surface cracking and distress can be fixed. Grade and slope of the pavement can be improved If the depth of treatment is sufficient. Ride quality will also be improved. CIR is much more economical than mill-and-fill. A rule of thumb is that CIR costs 50% less than the same thickness of hot mix and provides 80% of the strength.

RECYCLING TRAIN



Advantages of the Roadtec Train Concept

As government agencies adopt CIR technology because of its proven cost savings, they will also create CIR specifications for road builders to meet. With its on-board screen, crusher, weigh bridge, and computerized metering of additives, the RT-500 cold recycler gives contractors unprecedented control of the characteristics of the modified recycled asphalt product they produce. The Roadtec recycling train is capable of processing 500 tons of material per hour. Conveyors are outfitted with cleated belts for maximum production. A water spray system prevents dust build up on rollers, and the conveyors are covered for safety and to prevent roll-off.

The RT-500: Screening & Crushing

The RT-500's JCI brand double deck screen receives the milled up material from the RX-900 conveyor. Any oversized material goes through a Telsmith 3048 impact crusher and back to the screen via a two-conveyor return circuit.

Mixing & Blending

Material that passes the screen drops onto a weigh belt. The belt's electronic scale, accurate to +/- 1%, communicates with the blending computer, which in turn adjusts the flow of additives that go into the JCI/KPI Model 52 pugmill mixer. This twin shaft mixer has a capacity of 500 tons per hour. After a thorough mixing in the pugmill the material is discharged in a windrow onto the roadway or conveyed directly into a paver. The whole RT-500 system is run by electric motors powered by a Caterpillar C-9 generator set.

The RX-900 Cold Planer Provides the Material and the Power

The Roadtec 950 horsepower RX-900 cold planer is the recycling train's sole source of propulsion. It tows the RT-500 cold recycler as well as any additive tankers connected the train. Even the replenishing tankers that hook to the train to pump off their product are pushed or pulled by the powerful RX-900. Replenishing tankers are attached to the train just long enough to pump off their products and then go to a staging area where they are refilled to return to the train.



A Roadtec recycling train consists of tanker trucks, an RX-700 cold planer, the RT-500 Cold Recycler, pavers and compaction rollers. Treated material is fed either directly into a paver or discharged into a windrow.

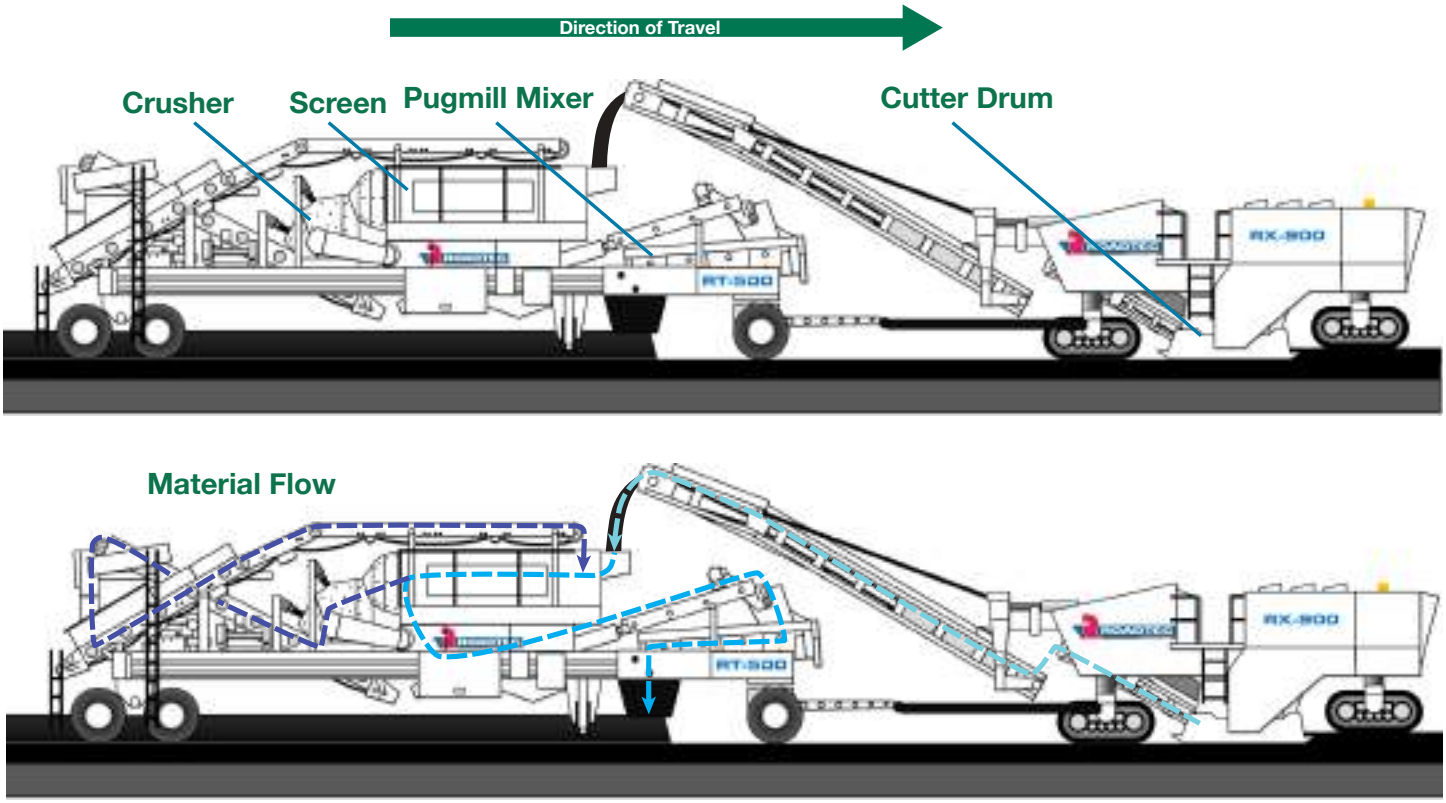

RT-500 COLD RECYCLER



Sorting Recycled Material by Size

After the RX-900 cold planer has milled up the damaged, old pavement layer, it feeds this material into the entry chute of the RT-500. From there the reclaimed material moves onto the double deck screen. The screen is a 5' x 14' (152 cm x 427 cm) low profile flat screen with fully adjustable amplitude and frequency, and can handle all kinds of materials. Thanks to rubber springs and mounting donuts, operation is smooth and quiet.

Material of proper size is allowed to pass through and any oversize material will be routed to the HSI Crusher and then recirculated to the top deck of the screen. All reclaimed material ends up in the twin shaft pugmill mixer.

Crusher Processes Oversized Material

Expect maximum wear life form the 3048 HSI Crusher with its heavy-duty main shaft and bearings. Four rows of massive hammer bars are part of the patented hammer and wedge design used in the crusher.

Thick AR400 liners serve as wear protection in the crusher. There's a hydraulic access door for easy maintenance. The shaft and rotor assembly can be removed without press fits or keys, making the shaft easy to remove from the rotor.

Sorting & Sizing Recycled Materials

1. Sort: The JCI-KPI double deck screen separates reclaimed material by size.

2. Size: The heavy-duty HSI crusher reduces oversize material to the proper size.

1



2



Making the New Mix

Material passing the screen moves on to the 48" (138 cm) diameter twin shaft pugmill mixer. The distance from paddle tip to the wall of the mixing chamber is adjustable, and paddle tips can be rotated up to 90° for longer dwell times in the mixer. Select from six paddle positions. Paddles are heavy duty and clad with wear resistant ni-hard. The pugmill mixer thoroughly mixes the sized material with emulsion and other additives. The finished mix is either discharged into a windrow or conveyed straight into the paver hopper.

Precise Metering of Additives

The computer-controlled additive system meters up to three additives. These are usually emulsion or foamed liquid asphalt cement, slurry, and water. After you've entered your desired percentage of additives depending upon the mix formula, the computer adds the correct amount of liquid to the aggregate in the pugmill mixer. Data flows from the extremely accurate belt scale (±1%) (located between the screen and the pugmill mixer) to the emulsion metering system, assuring that the amount of additives is correct for the amount of aggregate at all times. Spray and return valve operation is also fully computer-controlled.

RT-500 COLD RECYCLER





Production Log for Accurate Reporting

The RT-500 computer will log all production data at desired intervals. The data then can be downloaded for a complete history report, which includes rates of all materials used, date, time, distance (or station), and speed. Data can be shown in either Metric or English units.

Integral System Purge for Clean-Out

The emulsion system includes strainers and a positive clean-out feature for easy flushing.A solvent tank is attached to the machine and allows easy clean up at the end of the workday. Emulsion residue is removed from all hoses and spray nozzles by simply circulating the cleaning fluid through the system.

Choose Paver-Loading or Windrow Equipment on Your Cold Recycler

Depending upon your needs, you can select the RT-500 with various options, including a choice between paver-loading and windrow models. The capacity of both machines is the same, yet shipping dimensions and weight are lower with the dual axle windrow version. Please see the last pages for more information.



Conveyor discharges directly into the paver.

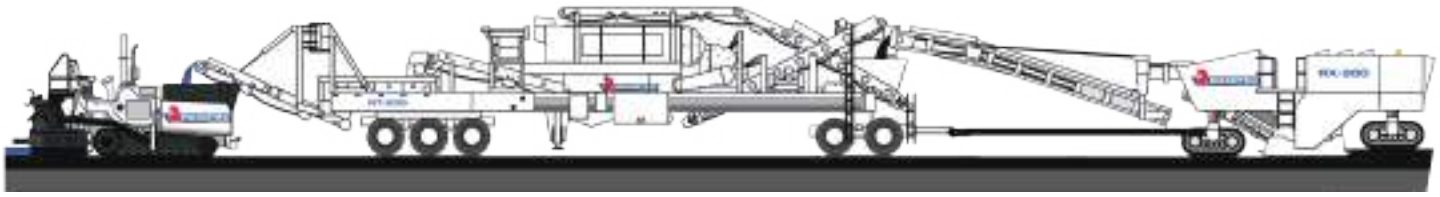

Windrow discharge uses a windrow pick-up machine to load the paver.

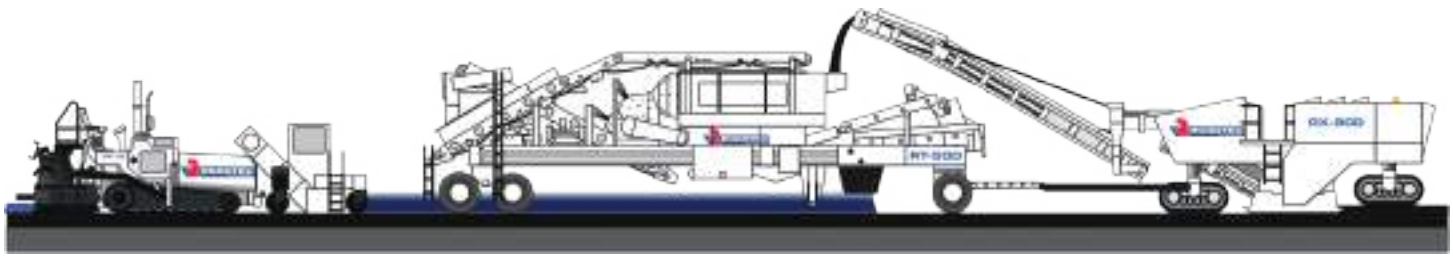

COLD PLANER CIR



Cold-In-Place Options Add Profit Hours to Your Roadtec Cold Planer

When precise sizing of aggregate is not required and for roads with lighter traffic loads, CIR applications require only a Roadtec cold planer equipped with an emulsion package.

Using the Cold Planer with an Emulsion Package for CIR

The process is similar to the recycling train, but without sizing and weighing of milled up material. Mixing is accomplished in the cutter housing of the cold planer.

A bitumen tanker is attached to the front of the Roadtec cold planer. A push bar connects the two and the Roadtec cold planer will be pushing the tanker.

The supply hose from the tanker attaches to the Roadtec cold planer emulsion package. Emulsion is drawn from the tanker by the emulsion package's pump and distributed in the cold planer cutter housing spray bar.

In the cutter housing the drum cuts the old pavement to the desired depth and the emulsion is mixed in. The rotating cutter drum serves as the mixing mechanism. Most commonly, cutting depths will be up to 4 inches (10 cm).

With the adjustable rear door at the Roadtec cutter housing, it's possible to leave a windrow of material as the cold planer moves ahead. A windrow elevator follows, picks up the material and transfers it to the paver hopper.

The optional CIR package Includes the emulsion pump, blending computer, cutter housing spray bar and towing/pushing hardware installed at the rear of the machine.

Choices in Handling Treated Material

Whether you're adding emulsion or simply pulverizing you'll want to spread the material in the cut to be compacted for the new surface. With Roadtec cold planers you can:

- Feed the material into a paver via the secondary conveyor.
- Temporarily remove the secondary conveyor and allow the primary conveyor to deposit the material into a windrow.
- Turn both conveyors off and adjust the height of the rear mold board, letting material exit out the back of the cutter housing. A chute can be installed at the rear mold board to form the windrow.



Special Application: Using Your Cold Planer As a Pulverizer

Some deteriorating, low traffic farm-to-market roads may only need their top layer worked into the flex base. No binding agent may be required or dry additives may be used.

You can run the planer forward (upcutting) and backward (downcutting) to determine which resulting gradation is the most suitable. Then simply adjust the rear cutter housing door to spread the material in the cut.

A grader to evenly distribute the material followed by a compaction roller is all that is needed to prepare the surface for a layer of hot mix at a later time. Even without the asphalt surface course the road can be opened to traffic.

Special Applications: Dedicating your Machine to CIR

If the contractor wants to use a Roadtec cold planer cold-in-place work strictly for cold-in-place recycling work, Roadtec can modify the machine into a recycler. The emulsion package could be installed at the front of the machine and supplied without any conveyors.

SPECIFICATIONS

500 TPH (453 MTPH) COLD IN PLACE RECYCLE TRAILER

- Single Trailer Unit - High Portability
- Designed to be pulled by RX-900 milling machine or to be used in as a stationary mixing plant
- Tow dolly for use during operation
- Capacity = 500 tons per hour (453 metric tons per hour)
- Hydraulic powered landing gear for stationary applications
- Electric Switch Gear with lighted and sealed buttons, circuit breakers, overload protection, master stop, and interlocks
- Caterpillar Tier III generator set - C9 or C13 depending on options chosen:
- Optional Voltages, Hertz, Emission Standards, 225kW to 320 kW
- Wide spread axles for stability and flotation with spring brakes
- Axle is raised in center on windrow unit to clear windrow

CONVEYORS

- Cleated belts for maximum production
- Skirted for safety and to prevent roll-off
- Lagged head pulleys for non-slip traction
- Water sprays to prevent rap dust build-up on rollers
- Underscreen conveyor tilts up to improve access to pugmill

KPI MODEL 50-488 PUGMILL

- 48" (.91M) diameter Twin Shaft mixers x 6'-0" (1.83M) long
- Paddle tips arranged in a 45° spiral around each log to promote aggressive mixing
- Paddle tips are adjustable ¾" (19mm) to 2" (51mm) from paddle tip to chamber wall
- Paddle tips can be rotated 90° to increase retention time in mixing chamber
- Timed gear drive
- Heavy duty oil filled gearbox w/heavy duty spur gears for positive shaft rotation
- Long life paddles, extra wear plates on inlet and discharge
- Drop out bottom for ease of clean-out & paddle tip maintenance
- Curved bottom for minimal dead weight
- Ni-Hard paddles with 6 positions to increase retention, improve mixing, & increase life

TELSMITH CRUSHER IMPACTOR 3048 HSI

- Mainshaft and bearings for maximum wear life
- Shaft and rotor assembly feature ringfedders to provide lock of shaft and rotor without press-fits or keys (allows for easy removal of shaft from rotor)
- 4 Rows of massive hammer bars
- 200 tons per hour (181 metric tons per hour) crushing
- Patented Hammer and Wedge Design provides 4 wear surfaces for maximum life
- Hammer bars are 28% chrome iron alloy
- Precision machined surfaces provide 100% backing for hammers
- Two - moveable aprons to allow for hammer wear
- Spring return on moveable aprons to eliminate shear bolts for tramp iron relief
- 1" (25 mm) Thick AR400 Liners
- Hydraulic access door for easy maintenance
- Minimum 150 hp (112 kW) electric motor drive.
- Fully enclosed belt guard

JCI 5142-24 "LP" SCREEN

- 5' x 14' (1.5 m x 4.3 m) double deck "Low Profile" flat screen
- Screen is fully adjustable in amplitude and frequency (Maximum Stroke ¾" or 19.0mm)
- Adjustable oval motion length and timing angle provides exclusive flexibility
- Frequency = 675-875 RPM's
- Triple Shaft Vibrating Mechanism provides:
- Less plugging and blinding
- Maximum bearing life
- Huck-bolted construction coupled with triple shaft design, spreads the shaft force out over a wider area, and provides reduced basket stress and maximum service life of frame
- Heavy duty feeder box
- Patent Pending "Titan Oil Seal" provide leak free bearings
- Rubber springs or mounting donuts for smooth and quiet operation
- 25 hp (19kW) electric motor with belt tensioner
- Allows for maximum production with varying types of material

ADDITIVE CONTROL SYSTEM

- Ability to control up to three additives – water, asphalt (emulsion or expanded) and slurry.
- One touch buttons for instant additive percentage changes
- Automated flush system with onboard solvent tank - automatically flushes entire additive system with solvent and returns to solvent tank.
- Hydraulic variable drive positive displacement asphalt pump with reversing capability and suction strainer
- Positive displacement flow meter
- Full circulating system to guarantee flow to spray bar when needed
- Automatic computer controlled hydraulic Spray/Return valve operation
- Computer is directly connected to belt scale load cells and belt speed sensor
- Fully automatic belt scale calibration using test weights or materials
- Desired proportions of each product are entered as a percentage of RAP by weight
- Computer automatically adjusts the flow rates of each product to get the desired percentage based on belt scale rate
- Display of forward speed and totalization of distance processed
- Beginning station can be entered to allow for current station number to print on the production report.
- Computer will calculate the theoretical production rate based on speed, width, depth, and density of uncut pavement - can be used in place of belt scale if desired
- Alarm horn will sound if flow rate of any product cannot be controlled to the desired percentage, and also if the product valves do not move to "spray" positions when needed
- Computer logs all production data at desired intervals - data then can be downloaded for a complete history report including date, time, RAP total weight, RAP production rate, additive total weights, average additive rates, additive percentages of RAP, distance (or station), and speed. All parameter descriptions and values can be downloaded for a back-up of calibration data and set-up information
- System will work in either Metric or English units

OPTIONS

8' PUGMILL IN LIEU OF 6' PUGMILL

- 1,000 gal (3785 l) insulated and heated surge tank – mounted on RT-500, visual level indicator on tank as well as graphical display on additive control computer. Automatically fills when low and shuts off when full.
- Conveyor discharge orientation in lieu of windrow discharge – reorients trailer to provide discharge conveyor to feed directly into paver. Discharge conveyor pivots, raises and lowers – also folds for shorter transport length.
- Expanded Asphalt (foam) Additive System – includes foaming additive spray bar and water piping

HEAT TRACE SYSTEM FOR ADDITIVE PUMPS AND PIPING – RECOMMENDED WITH EXPANDED ASPHALT ADDITIVE SYSTEM

WEIGH BRIDGE CALIBRATION BIN

FLOW METER CALIBRATION TANK

SPECIFICATIONS

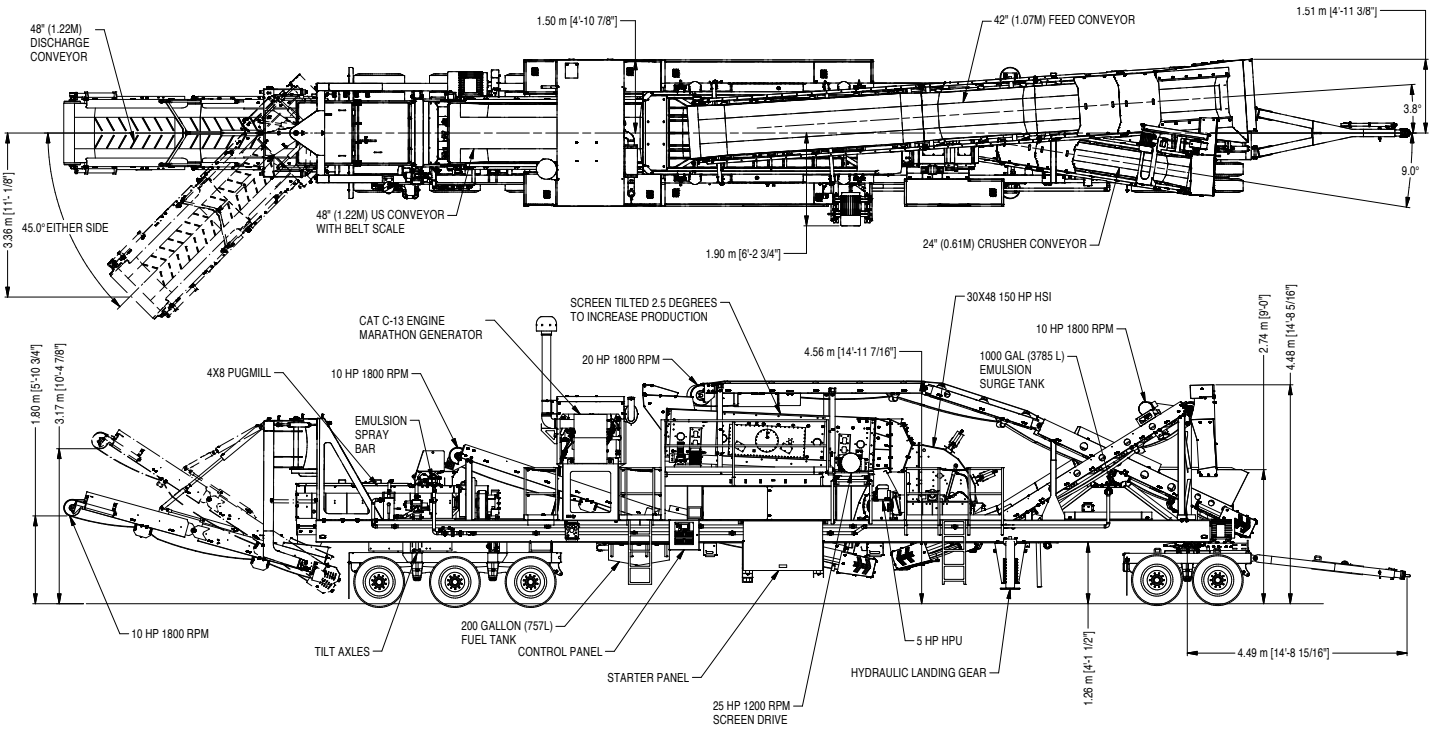

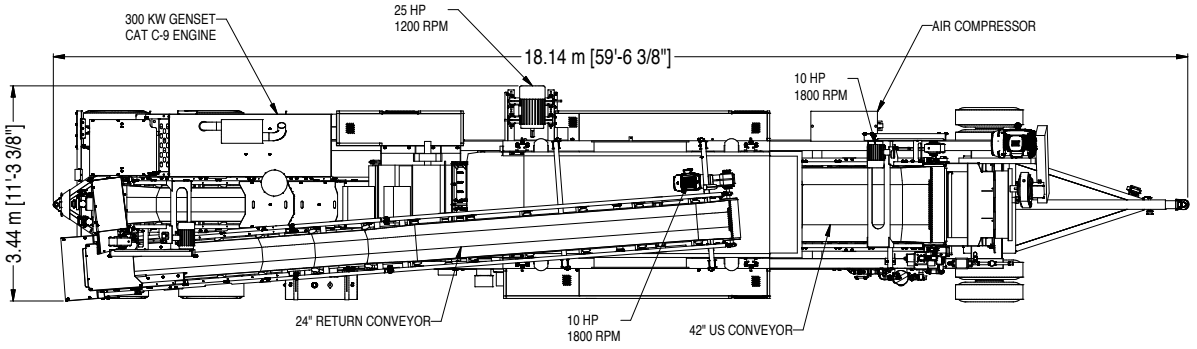
300 KW GENSET
CAT C-9 ENGINE
25 HP
1200 RPM
18.14 m [59'-6 3/8"]
AIR COMPRESSOR
10 HP
1800 RPM
3.44 m [11'-3 3/8"]
24" RETURN CONVEYOR
10 HP
1800 RPM
42" US CONVEYOR

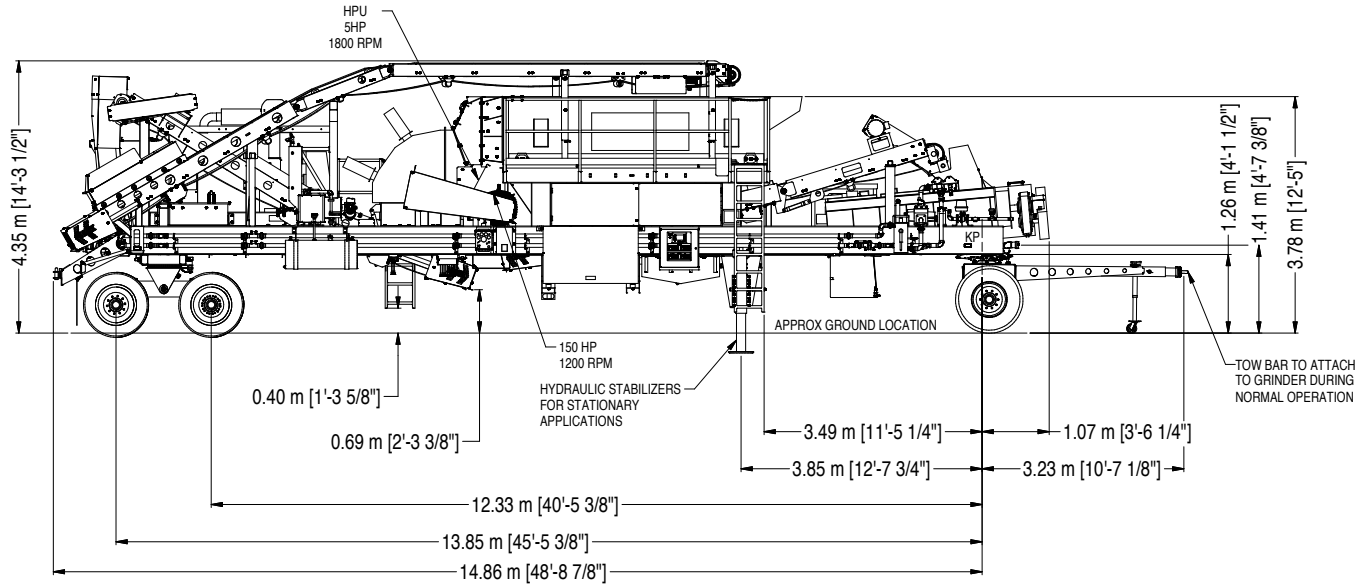
HPU
5HP
1800 RPM
4.35 m [14'-3 1/2"]
1.26 m [4'-1 1/2"]
1.41 m [4'-7 3/8"]
3.78 m [12'-5"]
KP
APPROX GROUND LOCATION
150 HP
1200 RPM
TOW BAR TO ATTACH
TO GRINDER DURING
NORMAL OPERATION
0.40 m [1'-3 5/8"]
HYDRAULIC STABILIZERS
FOR STATIONARY
APPLICATIONS
0.69 m [2'-3 3/8"]
3.49 m [11'-5 1/4"]
1.07 m [3'-6 1/4"]
3.85 m [12'-7 3/4"]
3.23 m [10'-7 1/8"]
12.33 m [40'-5 3/8"]
13.85 m [45'-5 3/8"]
14.86 m [48'-8 7/8"]

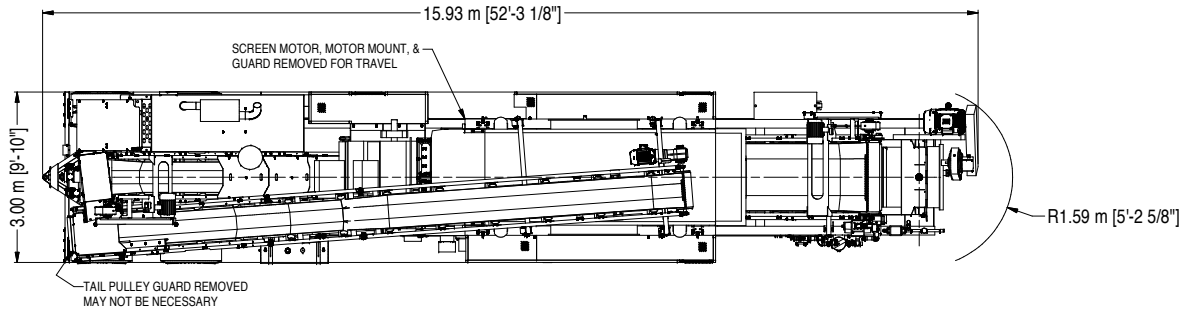
15.93 m [52'-3 1/8"]
SCREEN MOTOR, MOTOR MOUNT, &
GUARD REMOVED FOR TRAVEL
3.00 m [9'-10"]
R1.59 m [5'-2 5/8"]
TAIL PULLEY GUARD REMOVED
MAY NOT BE NECESSARY

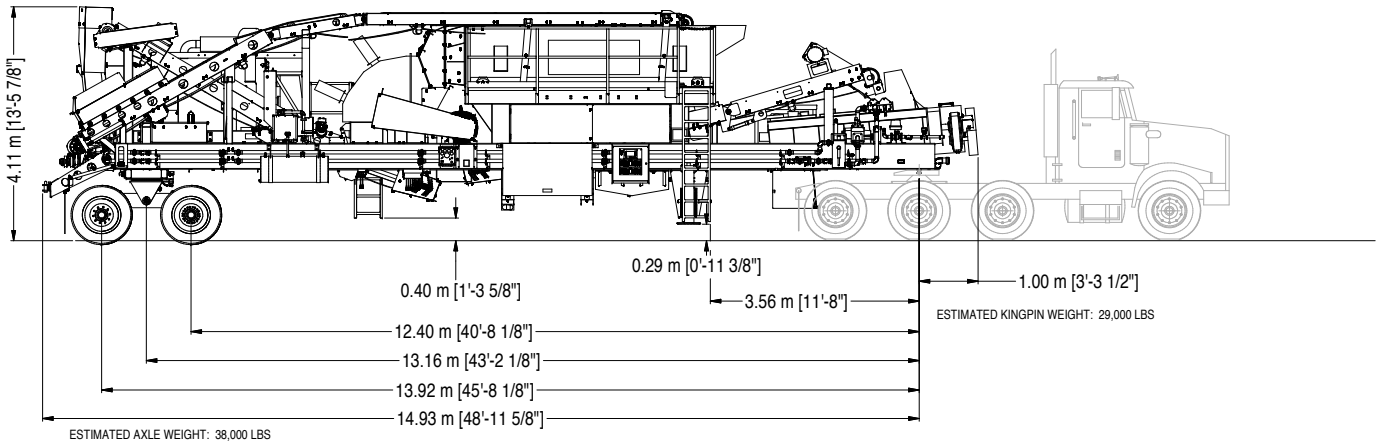
4.11 m [13'-5 7/8"]
0.40 m [1'-3 5/8"]
0.29 m [0'-11 3/8"]
3.56 m [11'-8"]
1.00 m [3'-3 1/2"]
ESTIMATED KINGPIN WEIGHT: 29,000 LBS
12.40 m [40'-8 1/8"]
13.16 m [43'-2 1/8"]
13.92 m [45'-8 1/8"]
14.93 m [48'-11 5/8"]
ESTIMATED AXLE WEIGHT: 38,000 LBS