Remu

Pontoon Undercarriage technical data

Big Float E10

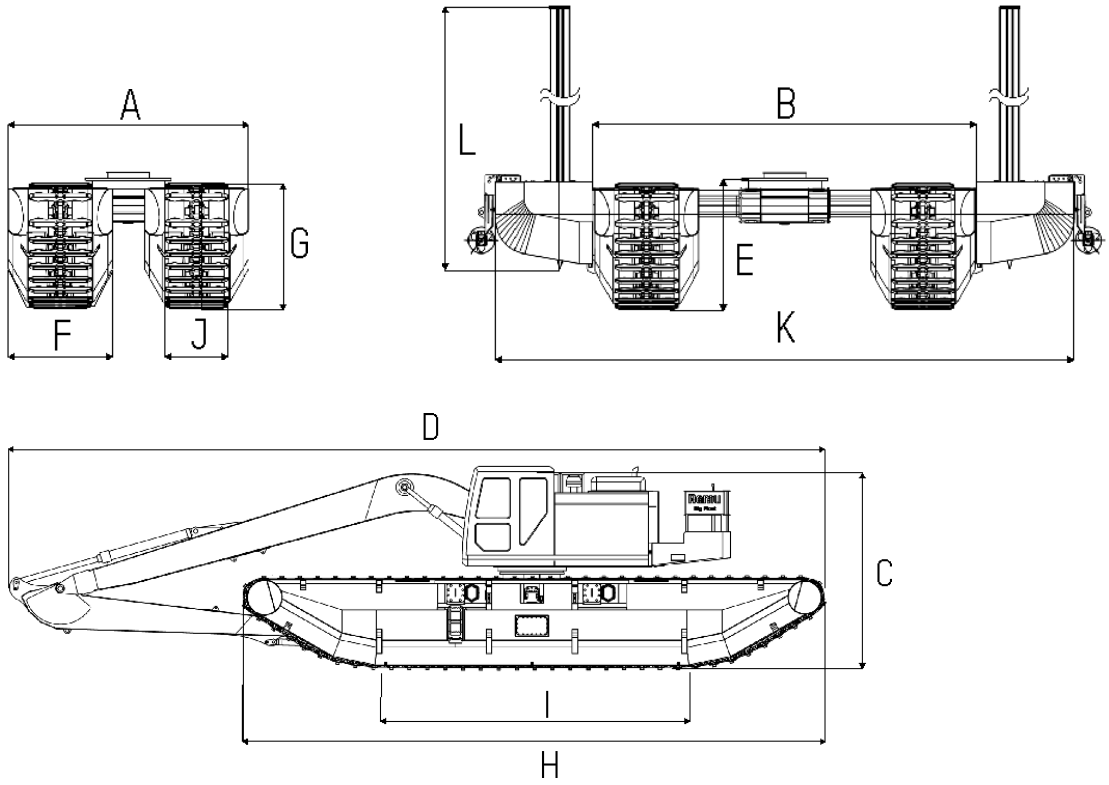

ASSEMBLED UNIT		METRIC	IMPERIAL
	GROSS WEIGHT *1	17 000 kg	37 600 lbs
A.	TRANSPORT WIDTH (MIN)	3 000 mm	9 ft 10 "
B.	WORKING WIDTH (MAX)	4 600 mm	15 ft 1 "
C.	OVERALL HEIGHT *1	3 500 mm	11 ft 6 "
D.	OVERALL LENGTH *1	10 200 mm	33 ft 5 "
E.	UNDERCARRIAGE HEIGHT WITH ADAPTER RING	1 450 mm	4 ft 9 "
SINGLE PONTOON			
F.	OVERALL WIDTH	1 300 mm	4 ft 3 "
G.	OVERALL HEIGHT	1 450 mm	4 ft 9 "
H.	OVERALL LENGTH	8 200 mm	26 ft 11 "
I.	TRACK LENGTH ON GROUND	4 300 mm	14 ft 1 "
J.	TRACK PAD LENGHT	900 mm	3 ft
OPTIONAL ITEMS			
K.	WORKING WIDTH (WITH ADDITIONAL PONTOONS MAX)	6 450 mm	21 ft 2 "
L.	ANCHORING LEGS LENGTH	4 000 mm	13 ft 1 "
M.	SWING RADIUS (COUNTERWEIGHT WITH LOAD BAY AND IN-BUILT FUEL TANK)	2 600 mm	8 ft 6 "

*1) Estimated numbers based on average base excavator and long front boom details

REMU OY
FINLAND

INFANTIE 7
FI-63700 ÄHTÄRI

+358 20 743 1160
INFO@REMU.FI

WWW.REMU.FI
VAT FI1094506/

WE HAVE A POLICY OF CONTINUING IMPROVEMENT, THEREFORE WE RESERVE THE RIGHT TO CHANGE SPECIFICATIONS AND MAKE TECHNICAL CHANGES WITHOUT ANY PRIOR NOTICE - V.2020

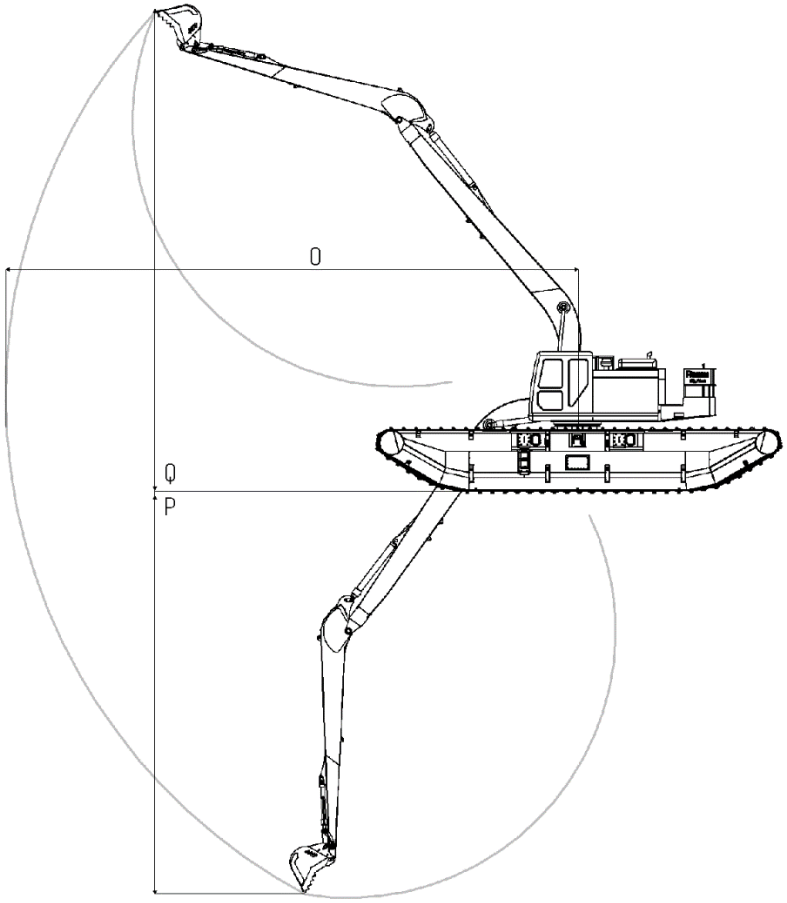

WORKING RANGE	METRIC	IMPERIAL
O. MAXIMUM REACH AT GROUND LEVEL *1	10 000 mm	32 ft 10 "
P. MAXIMUM DIGGING DEPTH *1	7 600 mm	25 ft
Q. MAXIMUM CUTTING HEIGHT *1	10 000 mm	32 ft 10 "

*1) Estimated numbers based on average base excavator and long front boom details

CONSTRUCTION: Big Float manufactured with high strength wear resistant steel for the best protection against external stress and impacts. Each pontoon has five watertight sections with manhole access on top of the pontoon. Carefully engineered shape and measurement of the undercarriage maximizes its stability in various job environments.

TRACK SYSTEM: Big Float durable track system, utilizing standard excavator track chains and track rollers, provides unbeatable lifetime of wear parts and eliminates chances of unpredictable breakdown.

TRAVEL MOTORS, paired with planetary final drives, deliver high torque through drive sprockets directly to track chains, eliminating need for unreliable components.

REMU OY
FINLAND

INFANTIE 7
FI-63700 ÄHTÄRI

+358 20 743 1160
INFO@REMU.FI

WWW.REMU.FI
VAT FI1094506/

WE HAVE A POLICY OF CONTINUING IMPROVEMENT, THEREFORE WE RESERVE THE RIGHT TO CHANGE SPECIFICATIONS AND MAKE TECHNICAL CHANGES WITHOUT ANY PRIOR NOTICE - V.2020