Big Float E35

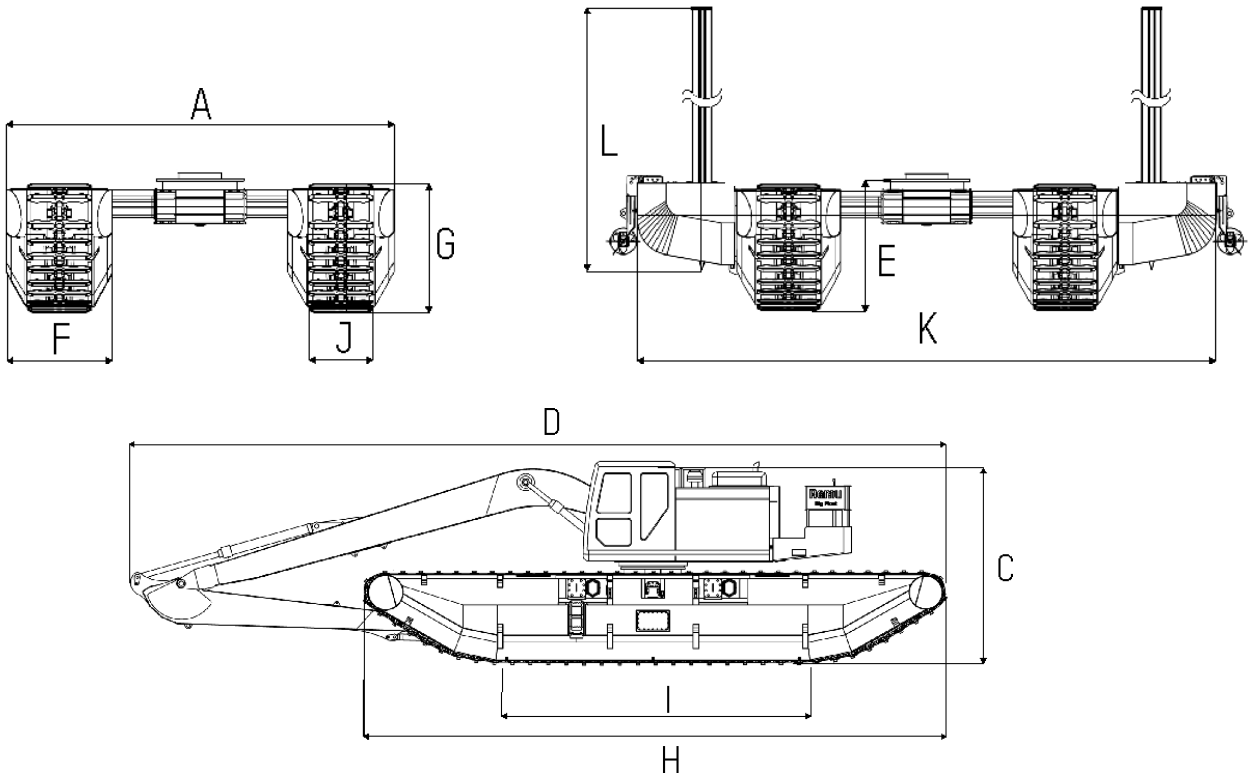

ASSEMBLED UNIT	METRIC	IMPERIAL
GROSS WEIGHT *1	45 000 kg	99 600 lbs
A. WORKING WIDTH	6 180 mm	20 ft 4 "
C. OVERALL HEIGHT *1	4 060 mm	13 ft 4 "
D. OVERALL LENGTH *1	17 330 mm	56 ft 10 "
E. UNDERCARRIAGE HEIGHT WITH ADAPTER RING	1 950 mm	6 ft 7 "
SINGLE PONTOON		
F. OVERALL WIDTH	2 010 mm	6 ft 7 "
G. OVERALL HEIGHT	1 900 mm	6 ft 2 "
H. OVERALL LENGTH	11 860 mm	38 ft 11 "
I. TRACK LENGTH ON GROUND	7 000 mm	23 ft
J. TRACK PAD LENGTH	1 530 mm	5 ft
OPTIONAL ITEMS		
K. WORKING WIDTH (WITH ADDITIONAL PONTOONS MAX)	9 380 mm	30 ft 9 "
L. ANCHORING LEGS LENGTH	6 000 mm	19 ft 8 "
M. SWING RADIUS (COUNTERWEIGHT WITH LOAD BAY AND IN-BUILT FUEL TANK)	3 700 mm	12 ft 2 "

REMU OY
FINLAND
IN-AATIE 7
FI-85730 ÄHTÄRI
+358 20 743 1160
IN-FO@REMU.FI
WWW.REMU.FI
VAT FI10945067

WE HAVE A POLICY OF CONTINUING IMPROVEMENT, THEREFORE WE RESERVE THE RIGHT TO CHANGE SPECIFICATIONS AND MAKE TECHNICAL CHANGES WITHOUT ANY PRIOR NOTICE - V11.2310

Remu

Pontoon Undercarriage technical data

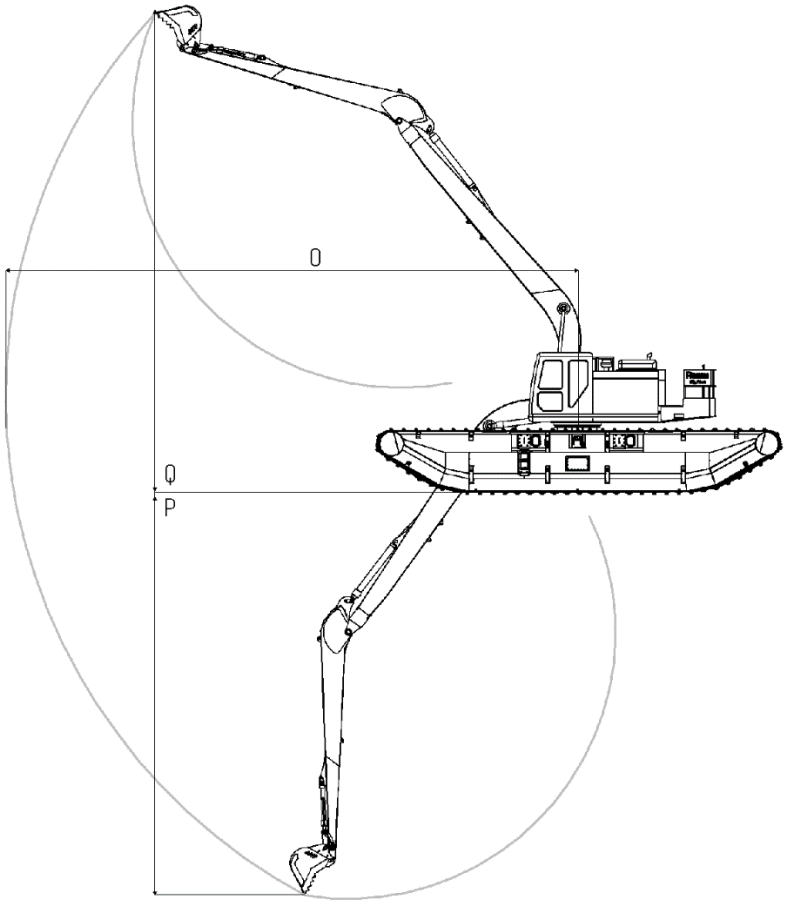

WORKING RANGE	METRIC	IMPERIAL
N. MAXIMUM REACH AT GROUND LEVEL *1	18 300 mm	60 ft
O. MAXIMUM DIGGING DEPTH *1	14 000 mm	45 ft 11 "
P. MAXIMUM CUTTING HEIGHT *1	15 700 mm	51 ft 6 "

*1) Estimated numbers based on average 30 ton class base excavator and 60 ft. long front boom details

CONSTRUCTION: Big Float manufactured with high strength wear resistant steel for the best protection against external stress and impacts. Each pontoon has five watertight sections with manhole access on top of the pontoon. Carefully engineered shape and measurement of the undercarriage maximizes its stability in various job environments.

TRACK SYSTEM: Big Float durable track system, utilizing standard excavator track chains and track rollers, provides unbeatable lifetime of wear parts and eliminates chances of unpredictable breakdown.

TRAVEL MOTORS, paired with planetary final drives, deliver high torque through drive sprockets directly to track chains, eliminating need for unreliable components.

REMU OY
FINLAND

INFANTIE 7
FI-63700 ÄHTÄRI

+358 20 743 1160
INFO@REMU.FI

WWW.REMU.FI
VAT FI1094506/

WE HAVE A POLICY OF CONTINUING IMPROVEMENT, THEREFORE WE RESERVE THE RIGHT TO CHANGE SPECIFICATIONS AND MAKE TECHNICAL CHANGES WITHOUT ANY PRIOR NOTICE - V11.2020