Remu



AMPHIBIOUS EXCAVATORS & DREDGERS

YOUR ACCESS TO UNREACHABLE LOCATIONS

BIG FLOAT

The Big Float undercarriage creates a safe working platform for challenging terrains. Each part of the unique design of Big Float is the result of careful study and field experience.

The shape of the pontoons, modern high strength steels, powerful drive motors and a chain system similar to standard excavators are only a few of the features that create safety, quality and better productivity at the end of the day.

UPPER STRUCTURE

Choose any commonly known excavator brand to mount.

PONTOON UNDERCARRIAGE

Pontoons are manufactured in four sizes.

Each excavator to be mounted is carefully weighed and measured to assure the needed stability and buoyancy from the pontoons.

Pontoons are also available without any upper structure.

STRONG AND PROVEN CHAIN STRUCTURE

WHY DO WE USE A CHAIN SYSTEM THAT IS SIMILAR TO A STANDARD EXCAVATOR'S CHAIN SYSTEM?

This amphibious excavator is designed to operate in challenging terrains where reliability has immeasurable value. A standard excavator track system has been developed and tested over decades and it has proven to be the strongest way to build a crawler track.

The standard excavator chain parts are available all over the world and the number of wearing parts in a standard excavator chain system is far less compared to other chain systems.



CHOOSE ADJUSTABLE UNDERCARRIAGE OR FIXED DESIGN

The Big Float models E10, E15 and E22 can be hydraulically adjusted, which allows the operator to pull the pontoons together when passing narrow gaps, and spread them apart to achieve steady positions when operating.

ADJUSTABLE WIDTH

WORKING WIDTH



TRANSPORT WIDTH



HIGH TORQUE FOR THE BEST MOBILITY

The shape of the pontoon offers the best mobility and strength.

5 WATERTIGHT COMPARTMENTS TO ENSURE SAFETY

ROBUST TRACK SYSTEM

Low maintenance costs. Superb durability.



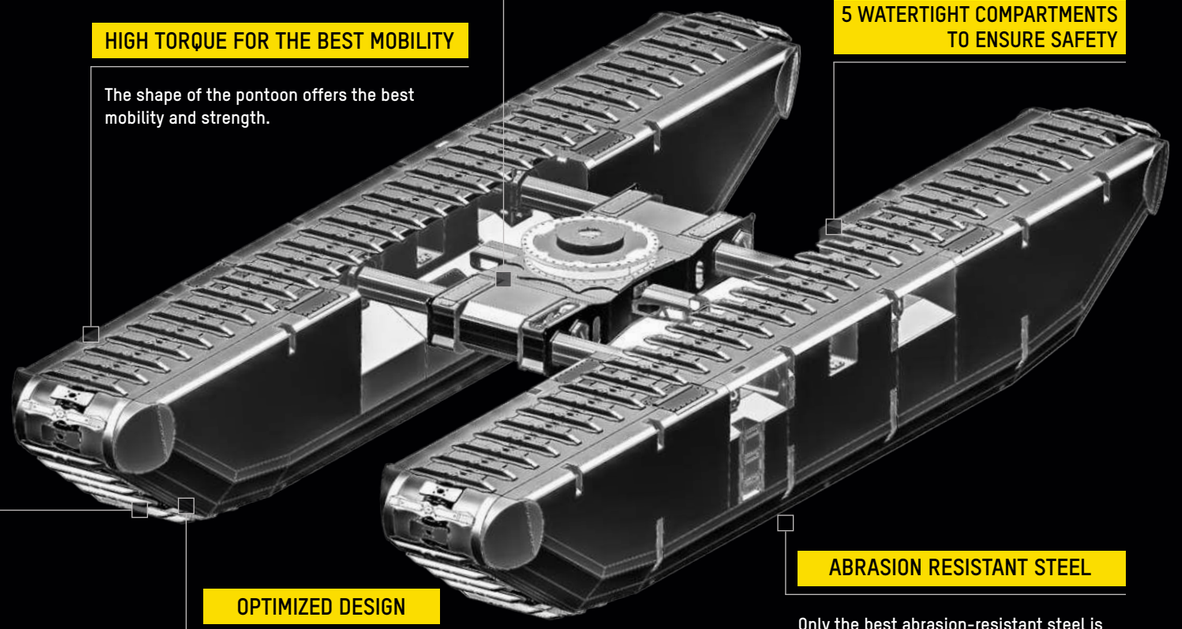

OPTIMIZED DESIGN

Measurements of the pontoons are designed to keep the center of gravity low and ensure steady operation.

ABRASION RESISTANT STEEL

Only the best abrasion-resistant steel is used in the wearing parts of the pontoons.

HARDOX® IN MY BODY

AMPHIBIOUS APPLICATIONS

BUILT TO OPERATE IN EVERY SITUATION





DIGGING DREDGING AND SUCTION DREDGING

All types of digging dredging in shallow water areas down to 9 meters can be achieved with the Big Float.

Removing mud or stones, transforming reservoir banks, or cleaning industrial waste ponds are the most common applications for the Big Float. The Big Float can also operate as a tool carrier for suction dredging equipment.

CLEARING WATERWAYS

The Big Float is easy to operate in canals and other narrow waterways.

Debris, trash, branches from trees and excess sediment that has piled on the bottom of a waterway can be removed with a rake or dredging bucket.

MINING INDUSTRY

The Big Float can be helpful in many stages in open cast mines.

Assisting water pumps and other dewatering and damming jobs are examples of how the Big Float has been used in the mining industry.

LANDSCAPING & CUTTING AQUATIC VEGETATION

The Big Float offers a safe and convenient way for landscaping in swampy areas on the shoreline. Removing aquatic vegetation, and the roots can be accomplished effectively when the machine is equipped with a rake.

Special hydraulic tools can also be used for clearing weeds, willow trees and bushes from waterfronts.

LEVEE CONSTRUCTION AND RESTORATION OF WETLANDS

Levee systems are built to prevent a river or coastal flooding, and with the purpose of water conservation. Amphibious excavators can be utilized in constructing levees in areas that are inaccessible to conventional excavators or cranes.

The Big Float has been used around the world to construct levees/dikes successfully in wet, soft terrains such as marshlands and wetlands.

ENVIRONMENTAL REMEDIATION AND COASTLINE PROTECTION

From the removal of pollution or contaminants from marshes to wetland reclamation or construction and maintenance in the shallow waters, the Big Float is a reliable amphibious excavator built with the highest quality standards and able to easily perform in the toughest terrains.

REACH HIGHER, STRONGER AND FURTHER

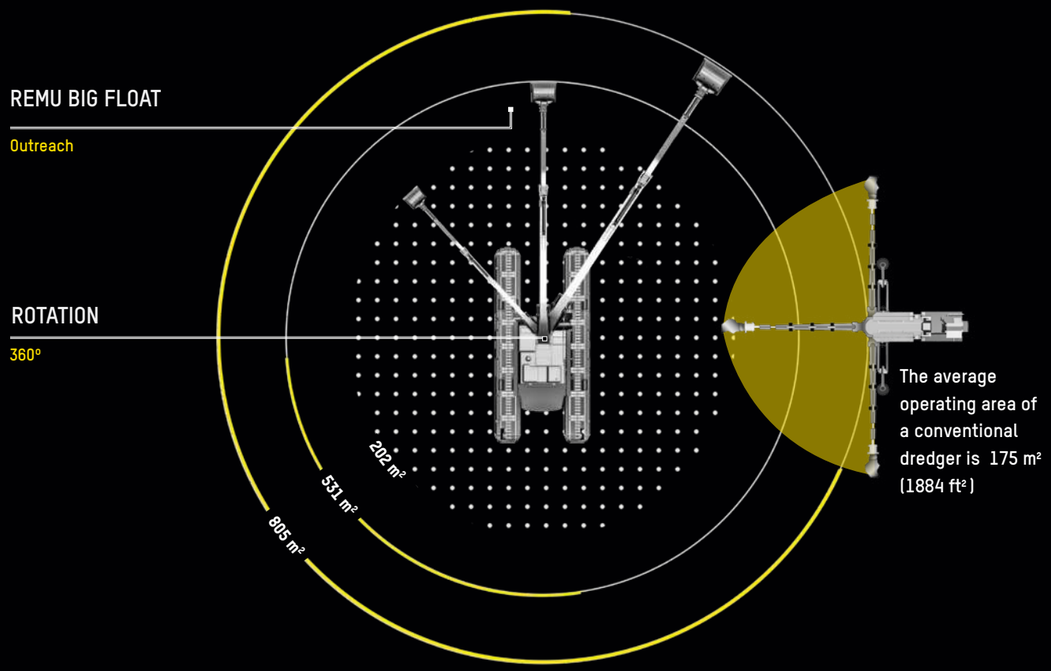

The average operating area of a conventional dredger is 175 m² (1884 ft²)

	BIG FLOAT E10		BIG FLOAT E15		BIG FLOAT E22		BIG FLOAT E35	
OPERATING AREAS	202 m²	2174 ft²	531 m²	5715 ft²	805 m²	8665 ft²	1052 m²	11309 ft²

The operating area of the Big Float amphibious excavator is superior compared to traditional dredgers.
Depending on the model and boom length, the outreach in front is according of boom system and base machine.

OPERATION AREAS

SWAMP, SHALLOW WATER AREAS AND OPEN WATER

DRY LAND & SWAMP

Adjustable Big Float models are instantly ready to operate. Drive out from lowboy maneuver over solid ground and start to operate on swampy and muddy areas.

SHALLOW WATER

The Big Float E10 will remain in contact with the bottom until the water depth is 1,2m (4ft) and the larger models down to 1,5 m (5 ft) water depth.

Shallow water areas are the working environment where most of the operations that include removing water vegetation, are carried out.

OPEN WATER

Working in open water requires additional pontoons and anchoring legs that secure the machine to the bottom.

The length of the anchoring legs are 6 m (20 ft) and the largest Big Float model can reach down to 14 m (46 ft).

Propellers are available for additional pontoons to enable easy access over open water areas.

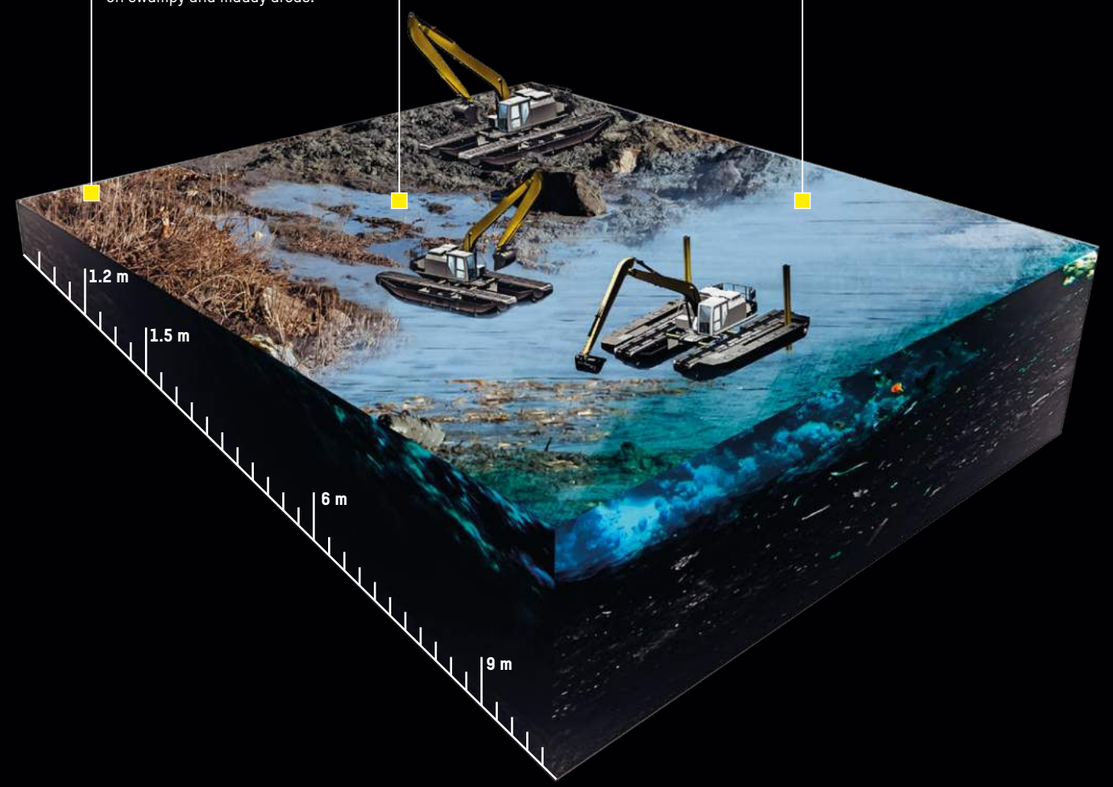

TRANSPORTATION AND HIGH MOBILITY

MAKES REMU BIG FLOAT THE RIGHT MACHINE

The adjustable models of REMU Big Floats are easy to transport from one job site to another: Simply retract the pontoons to transportation width, and drive the Big Float onto the lowboy. Even the Big Float E22 is only 3,5 meters (less than 11 ft 5 in) width in transportation mode.

TECHNICAL DETAILS

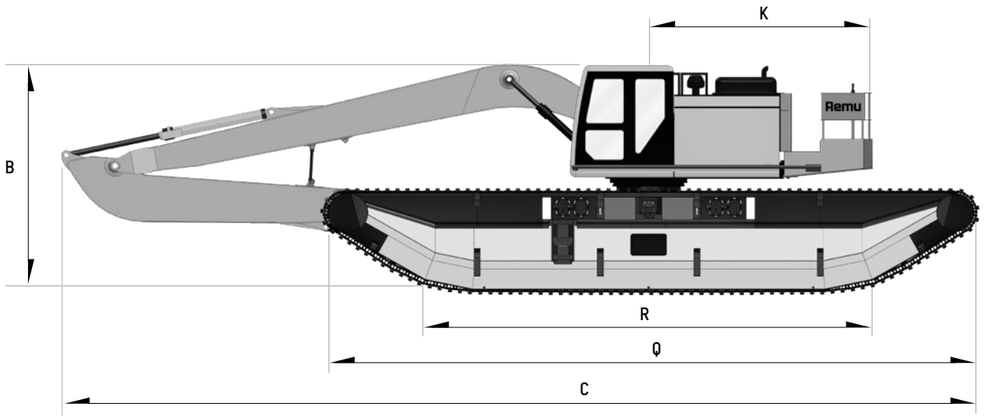

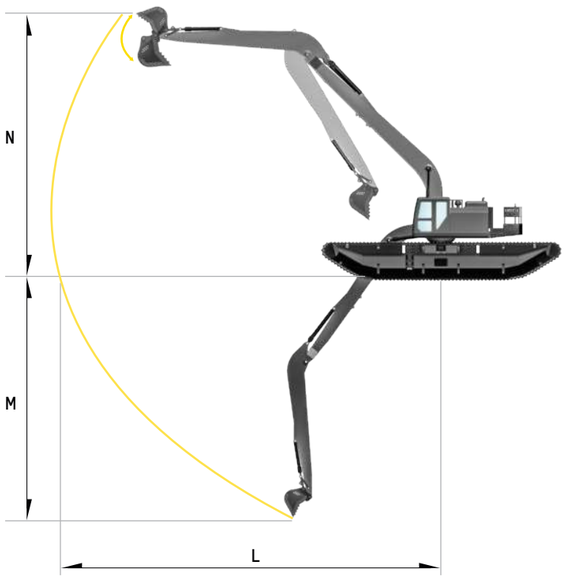

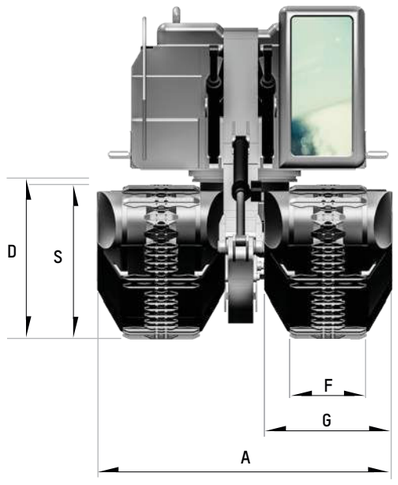

	BIG FLOAT E10		BIG FLOAT E15		BIG FLOAT E22		BIG FLOAT E35	
ASSEMBLED UNIT								
GROSS WEIGHT [1]	17 000 kg	37 500 lb	24 000 kg	53 000 lb	34 000 kg	75 000 lb	45 000 kg	99 600 lb
A MIN. TRANSPORT WIDTH	3.0 m	9 ft 10 in	3.0 m	9 ft 10 in	3.5 m	11 ft 6 in	6.2 m	20 ft
A MAX. WORKING WIDTH	4.6 m	15 ft	4.8 m	16 ft	5.5 m	18 ft	6.2 m	20 ft
B OVERALL HEIGHT [1]	3.5 m	11 ft 6 in	3.7 m	12 ft	3.9 m	13 ft	4.1 m	14 ft
C OVERALL LENGTH [1]	10.2 m	33 ft 6 in	13.7 m	45 ft	16.0 m	53 ft	17.3 m	57 ft
D UNDERCARRIAGE HEIGHT WITH ADAPTER RING	1.5 m	4 ft 11 in	1.7 m	5 ft 7 in	1.9 m	6 ft 3 in	2.0 m	6 ft 7 in
SINGLE PONTOON								
G OVERALL WIDTH	1.3 m	4 ft 3 in	1.3 m	4 ft 3 in	1.5 m	4 ft 11 in	2.0 m	6 ft 7 in
S OVERALL HEIGHT	1.4 m	4 ft 7 in	1.6 m	5 ft 3 in	1.8 m	5 ft 11 in	1.9 M	6 ft 2 in
Q OVERALL LENGHT	8.2 m	26 ft 11 in	11.2 m	36 ft 9 in	11.2 m	36 ft 9 in	11.9 m	39 ft
R. TRACK LENGHT ON GROUND	4.3 m	14 ft	6.0 m	20 ft	6.0 m	20 ft	7.0 m	23 ft
F TRACK PAD LENGHT	0.9/ 0.4 m	3 ft / 1 ft 4 in	0.9 m	3 ft	0.9 m	3 ft	1.5 m	5 ft
OPTIONAL ITEMS								
WORKING WIDTH (WITH ADDITIONAL PONTOONS MAX)	6.4 m	21 ft	7.6 m	24 ft 11 in	8.3 m	27 ft 3in	9.4 m	30 ft 9 in
ANCHORING LEGS LENGHT	4.0 m	13 ft 1 in	6.0 m	19 ft 8 in	6.0 m	19 ft 8 in	6.0 m	19 ft 8 in
K SWING RADIUS [1] (COUNTERWEIGHT WITH LOAD BAY AND IN-BUILT FUEL TANK)	2.4 m	7 ft 10 in	3.2 m	10 ft 6 in	3.8 m	12 ft 6 in	4.4 m	14 ft 5 in
WORKING RANGE								
L MAXIMUM REACH AT GROUND LEVEL [1]	10.0 m	33 ft	13.0 m	45 ft	15.5 m	50 ft	18.3 m	60 ft
M MAX DIGGING DEPTH [1]	7.6 m	25 ft	10.0 m	33 ft	11.5 m	38 ft	14.0 m	46 ft
N MAX CUTTING HEIGHT [1]	10.0 m	33 ft	11.0 m	36 ft	14.3 m	47 ft	15.7 m	51 ft
MAXIMUM WORKING DEPTH WITHOUT ADDITIONAL PONTOONS	1.2 m	3 ft	1.5 m	5 ft	1.5 m	5 ft	1.5 m	5 ft

[1] Can vary depending on the base machine

All weights and sizes (metric and imperial) are approximate. Specifications subject to modifications at manufacturer's discretion. Always revise the local limitations for road transportation. Some measurements depends on the chosen make and model of the base machine.

CUSTOMIZE YOUR BIG FLOAT

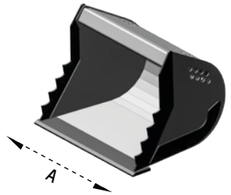

BUCKET

MODEL	VOLUME		A		WEIGHT	
BUCKET 300	300 litres	80 gal	1020 mm	40 inch	170 kg	375 lb
BUCKET 400	400 litres	105 gal	1200 mm	48 inch	390 kg	860 lb
BUCKET 600	600 litres	160 gal	1300 mm	52 inch	475 kg	1050 lb
BUCKET 800	800 litres	210 gal	1540 mm	60 inch	535 kg	1180 lb

Weight and sizes (metric and imperial) are approximate. Specification subject to modifications at manufacturer's discretion.

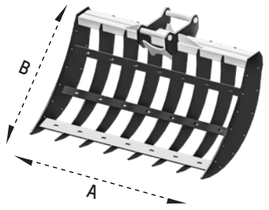

RAKE

MODEL	A		B		WEIGHT	
RAKE 1500	1520 mm	60 inch	1285 mm	50 inch	245 kg	540 lb
RAKE 1600	1600 mm	63 inch	1550 mm	60 inch	435 kg	960 lb
RAKE 2200 (with mesh)	2230 mm	88 inch	1550 mm	60 inch	535 kg	1180 lb

Weight and sizes (metric and imperial) are approximate. Specification subject to modifications at manufacturer's discretion.

TRACK PADS

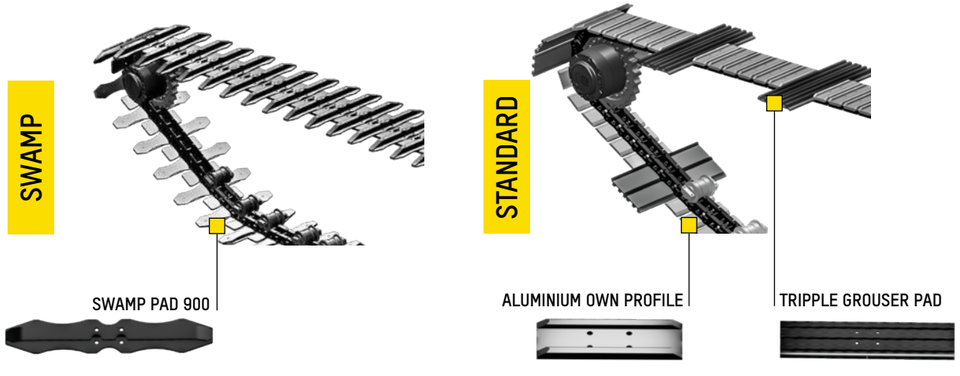

ADDITIONAL PONTOONS

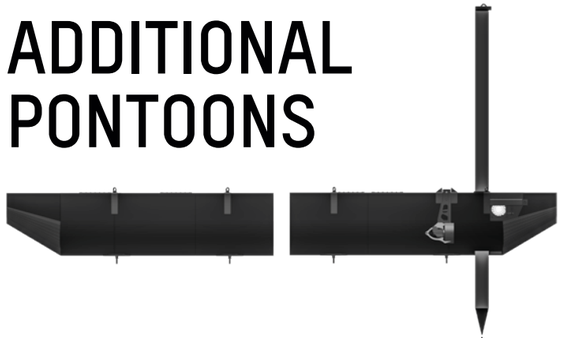

Additional pontoons give extra buoyancy and stability when working without bottom contact.

Each side of the additional pontoon consists of 2 separate parts for an easier assembly.

ANCHORING LEGS

Anchoring legs secure the Big Float to the bottom so that the machine does not move while digging or when working in conditions where a current occurs.

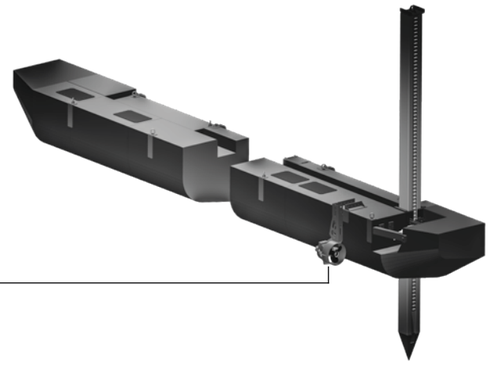

PROPELLERS

Propellers are attached to the additional pontoons to drive the Big Float in open water. The speed of 7 km/h (3,8 knots) (4,5 mph) can be achieved.

COUNTERWEIGHT



The REMU counterweight can be equipped with an inbuilt fuel tank to refuel the original.

It is lighter than a basic counterweight and it can be used to store additional equipment on top.

Remu



REMU OY

Inhantie 7
FI-63700 Ähtäri
Tel : +358 20 743 1160
Email : info@remu.fi

REMU USA INC.

8 Hemlock st.
Old Orchard Beach, ME 04064 USA
Tel : +1 888 600 0018
Email : usa@remu.fi

YOUR DEALER

REMU has a policy of continuing improvement, and reserves the right to change specifications without prior notice.
COPYRIGHT © 11/2020 REMU OY