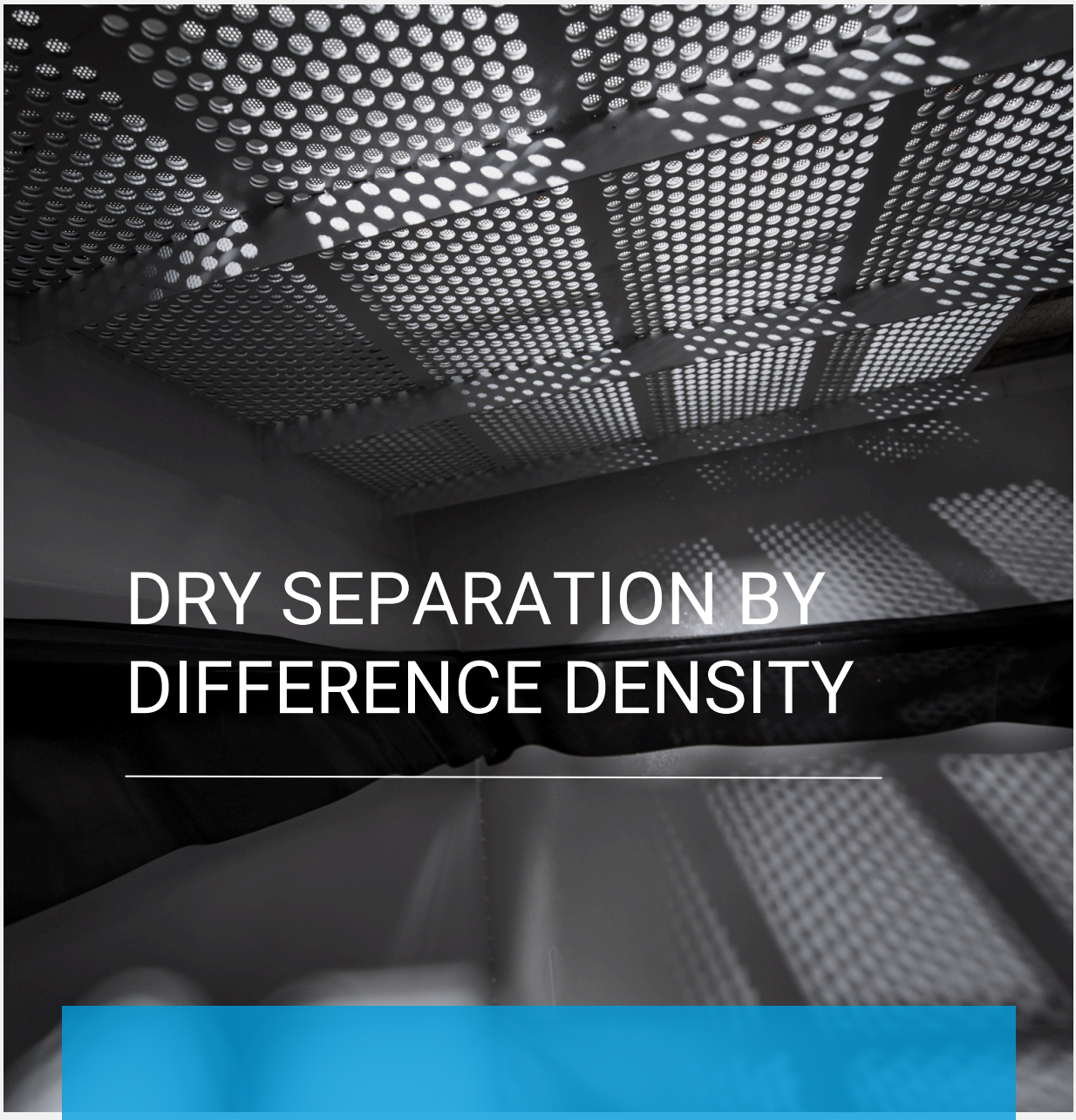

DRY SEPARATION BY DIFFERENCE DENSITY

GSort

Densimetric Table

MOGENSEN



GSort R Highlights

- Direct **CAPEX** : Specific capacity/investment
- Indirect **CAPEX**: Cost of installation
  (two heights available, with and without sunken heavy).
- **OPEX**: Direct maintenance costs kWh/t*
- Lead time improvements.
- Modularity: Adaptability.

*Metric ton

MOGENSEN

Parameter/Model	GSort R	Standard Densimetric Table
T/h*m width compost 35% humidity	13	6.5
Compost purity %	99	98
Compost losses %	2 to 3	3 to 5
Consumption kw/ton compost	1.75	2.5
% compost extracted by the filter in a specific case of moisture compost 35%	>40	<25
Cleaning interval of the treatment bottom	>3 days (sandwich deck)	8h
Machine downtime for exchanging the Treatment Bottom	5 min	40 min
Cost reduction in direct investment measured in t/(h*m*EUR) vs standard versions	30%	0

Advantages of GSort versus standard tables: KPIs

Explore more advantages

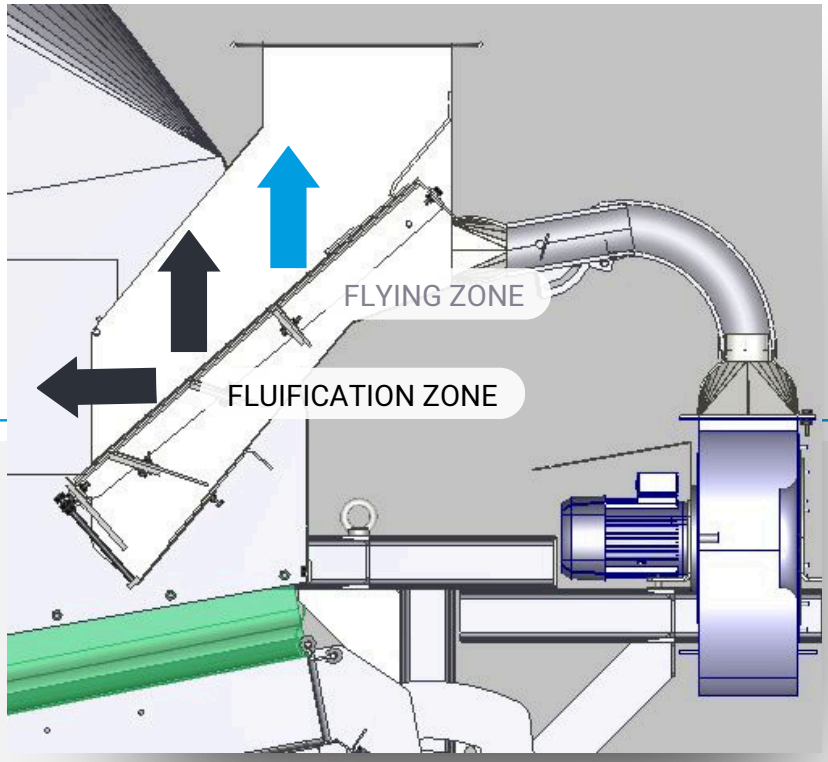

New Fluidized Input

GSort R combines fly speed and fluidized speed in the feeding chute leading to an increase in the table's capacity with a significant benefit as it is possible to load more inlet material (Ton/hour per meter width of the table) while reducing the kWh/t.

- **More material per table meter (direct CAPEX). t/(h*m*EUR)**
- **OPEX reduction (kWh/t)**

MOGENSEN

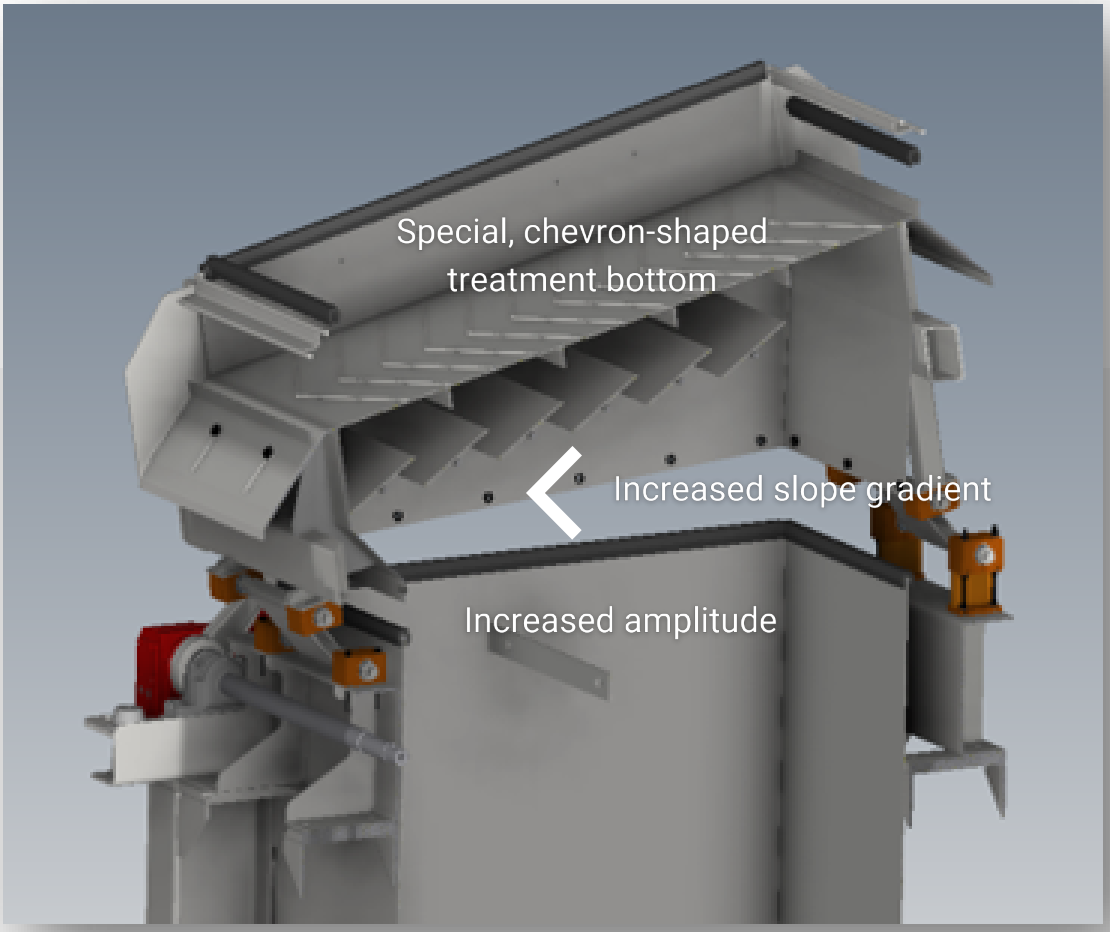

Enhanced machine base and increased inclination

GSort R's cutting-edge design features unique advancements and improvements to the machine inlet, treatment deck design, and air distribution system. These upgrades provide many benefits and provide an optimum sorting experience.

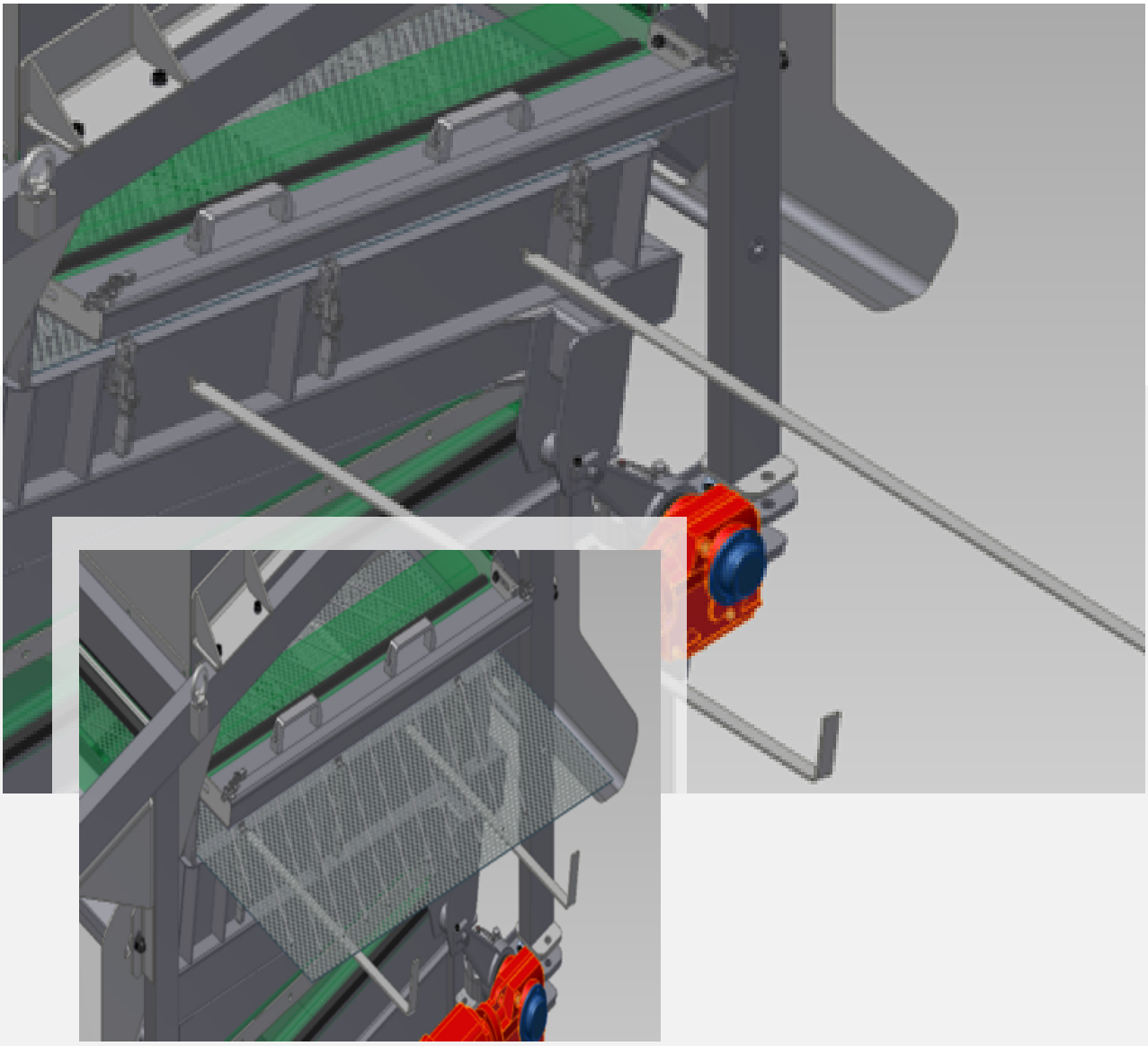

Easy Maintenance

The new air distribution system provides greater flexibility as it's easily adjustable, reducing maintenance time associated with conventional methods.

The treatment bottom can quickly and easily be replaced laterally instead of servicing it through in-/outlet openings.



GSort Highlights

- The GSort model offers improved adaptability to changing inlet properties and processing of materials due to its multiple operating levers in the new design.
- It works well with highly abrasive mineral materials like manganese and provides exceptional purity compared to other market separation equipment.
- GSort is the leading solution for dry separation, featuring enhanced dimensioning for its vibratory mechanism, suspension frame, and wall.
- Additionally, it has a user-friendly mechanical maintenance design with side openings on the vibratory box.

MOGENSEN



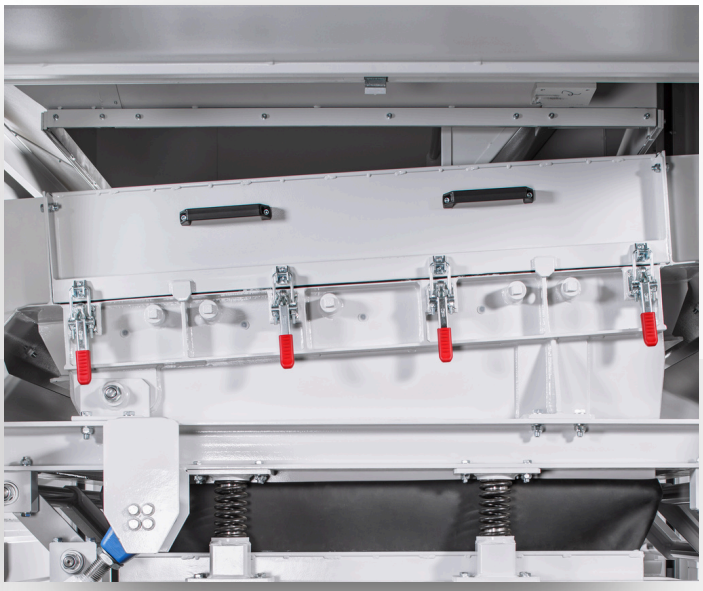

Fields of Application

GSort R	vs.	GSort M
Light applications	⇦➡	Heavy-duty applications
For fluidization speed < 4 m/s	⇦➡	For fluidization speed > 3 m/s
For densities < 1.7 t/m3 and particle sizes < 35 mm	⇦➡	For densities > 1.3 t/m3 and particle sizes > 25 mm

*The fluidization speed is determined by the material's density and the size or particle size distribution.





Models

GSort R		GSort M	
Table width: 50 cm	R50	G06	Table width: 50 cm
Table width: 100 cm	R100	G13	Table width: 100cm
Table width: 150 cm	R150	G19	Table width: 150 cm
	R50 (Basic)		
	R100 (Basic)		

Discover more



Process Robustness & Tolerance

- **Moisture:**
  The GSort R and GSort M are machines that can operate with moisture as long as there is no adhesion between the particles and free flow between them.

- **Feed Composition:**
  The GSort R and GSort M offer great stability against variations in feed composition.

- **Granulometry:**
  The general processing range is between 0.50 and 80 mm fed in optimal fractions. For minerals, the range is between 1 and 40 mm fed in optimal fractions.





Industries best suited for

GSort R

Compost MSW (0 - 10 mm)

Oversized compost MSW (10 - 40 mm)

Glass + organics (0 - 20 mm)

RDF (0-40 mm)

Vermiculite

Anthracite coal

PET-film

Rubber and textile

Fine manganese ore

GSort M

Coal

Magnesite

Hematite

Barite

Celestite

Attapulgite

Manganese ore

Ferrum-manganese

Aluminum recycling

Crusted cables

Crusted demolition waste

WHERE
We Are

MOGENSEN Spain

C/ Morse 12
Pol. Ind. San Marcos
28906 Getafe · Madrid

+34 91 577 62 77

info@mogensen.es

www.mogensen.es

Aramo Steel (Fábrica)
Ctra. Los Campos-Trubia Km 1,200
33416 Corvera, Asturias
Spain
Tel. +34 985 51 56 74
Website: www.mogensen.es
Email: info@mogensen.es

Mogensen Sweden
Sveavägen 26
54421 Hjo
Sweden
Tel. +46 503 3234-0
Webiste: www.mogensen.se
Email: info@mogensen.se

Mogensen Germany
Kronskamp 126
Wedel, Schleswig-Holstein 22880
Germany
Tel. +49 4103 8042-0
Email: info@mogensen.de