UNIVERSAL CONVEYORS LIMITED

Conveyors & Components





Quality Engineered
Excellence Since 1947

Engineering Excellence

Established in 1947, Universal Conveyors brings a wealth of technical expertise and experience to the Parker business.

Supplying equipment and services to a broad range of industries including Quarrying, Mining, Materials Handling, Recycling and Water Treatment.

Equipped with the latest in-house automated production facilities, Universal Conveyors manufactures and supplies a wide range of conveyor components and accessories used throughout multiple industries.



Conveyor Systems

- Troughed Belt Conveyors
- Mobile Troughed Belt Conveyors
- Field Conveyors
- Radial Troughed Belt Conveyors
- Stockpile & Reclaim Conveyors
- Trippers
- Ship Loaders
- Telescopic Conveyors
- Flat Bed Conveyors
- Picking Stations

Conveyor Accessories

- Conveyor Belting
- Vulcanising
- Belt Scrapers
- Transome Sets
- Return Rollers
- Head & Tail Drums
- Rotation Sensors
- Conveyor Covers
- Impact Bars
- Belt Trackers



Contents

Conveyors - 2

Conveyor Components - 4

Multitrough - 6

Unitrough - 21

Intertrough - 27

Idlers and Special End Fixings - 28

Rollers and Idler Brackets - 29

Order Form - 29

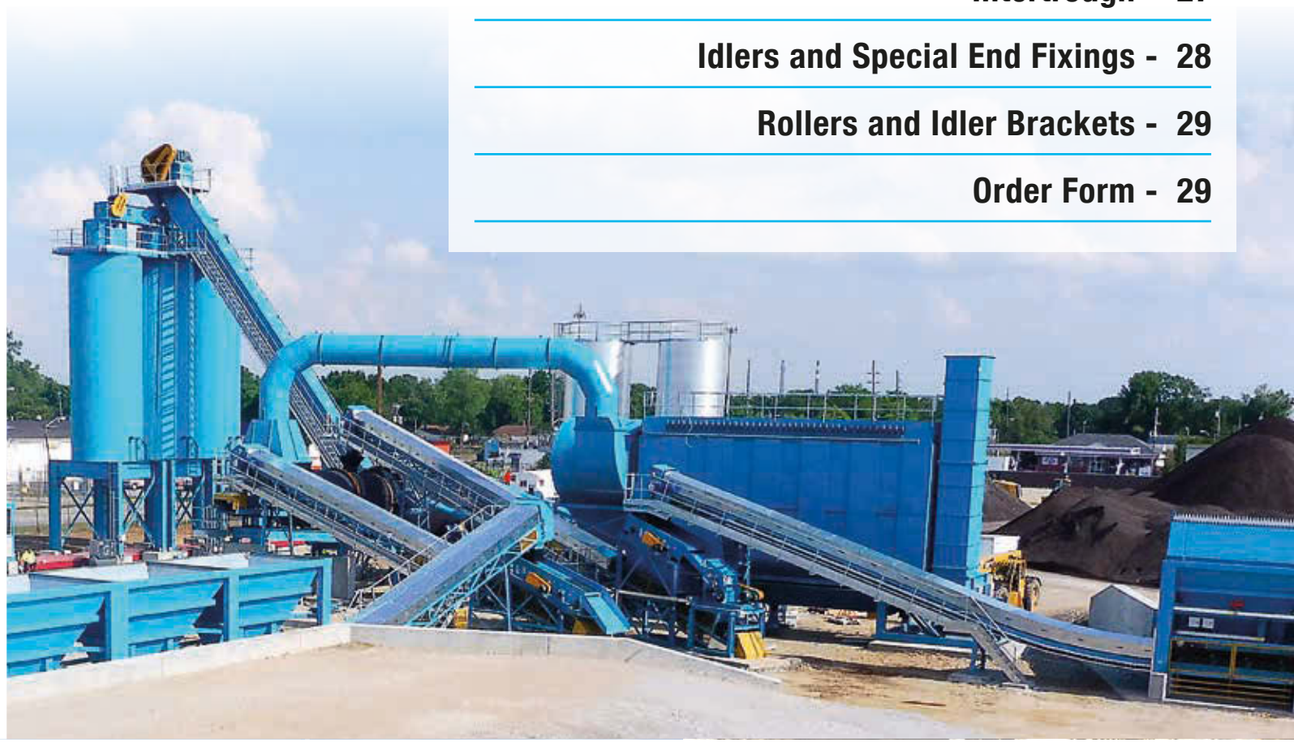





Conveyors

The Universal Conveyors' range of conveyors incorporates both mobile & static systems designed to be versatile in application; from shiploading & stockpiling to part of larger turnkey operations.

Individual conveyor units or components can also be designed to be part of bespoke or custom systems, dependent upon customers' individual needs.



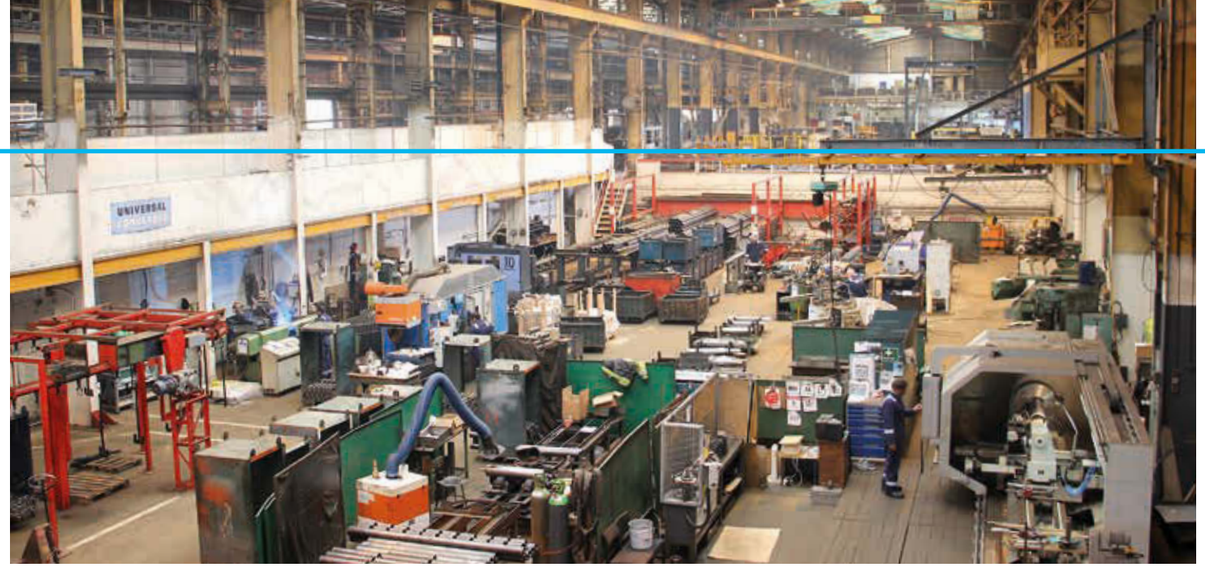



Complete Systems

With experience in the design, manufacture & installation of small, medium & large turnkey schemes, Universal Conveyors is able to supply complete handling systems. These systems may incorporate any combination of conveyors, bins, structures & associated equipment to provide a fully integrated handling system.



Troughed Belt Conveyors

Universal Conveyors' troughed belt conveyors are individually designed to suit a customer's specific requirements. Standard components are incorporated throughout the range, enabling future modifications if required. Any size of troughed belt conveyor can be manufactured, whether it is ground, aerial or angled. Options such as walkways, trip wires & covered conveyors can be supplied throughout the range.



Trippers

Travelling throw-off trippers can be incorporated into a variety of conveyor systems. Throw-off trippers divert material from the main conveyor & consequently stop any discharge from over the conveyor drive pulley. This is often necessary on long stockpile conveyors that feed storage bins. Trippers are either hand or electrically powered. Operator platforms can be included on moveable trippers. Gated chutes or cantilevered conveyors to extend the stockpiles can optionally be fitted.



Ship Loaders

Designed to complement modern day shiploading, shiploading conveyors enable the rapid loading of materials direct from the land transport. Available in static form or as a mobile unit, the shiploading conveyor aids the efficiency of dockside material handling. All shiploading conveyors are individually designed to suit specific applications & handling capacities



Mobile Troughed Belt Conveyors

The robust construction of our mobile troughed belt conveyors & the ease with which they can be installed allow the mobile range to complement both small or large scale operations. Universal Conveyors manufactures a range of 4000 Series & 5000 Series conveyors incorporating 500mm, 650mm, 800mm & 1000mm belt widths available as standard. Radial options are available for kidney shaped stockpiling.



Field Conveyors

Field conveyors are an immediate conveying solution for the most rugged of environments. Designed for rapid & easy installation a field conveyor can be installed in a fraction of the time it would take to install a conventional conveyor of a similar size. The conveyor sets are available with a fixed troughing angle of 30° or 35° or with variable spring loaded troughing angles. The sets are interchangeable with other variable trough structures of a similar design.



Telescopic Conveyors

Universal Conveyors' telescopic, flat belt conveyors can be operated as stand-alone units or can be incorporated as part of larger unit handling systems and are suitable for handling bulk objects or small packages. The telescopic conveyor provides the operator with the ability to adjust the unit's height & length as & when required. The unit's flexibility ensures that the telescopic conveyor can be incorporated into applications such as cargo/freight handling.

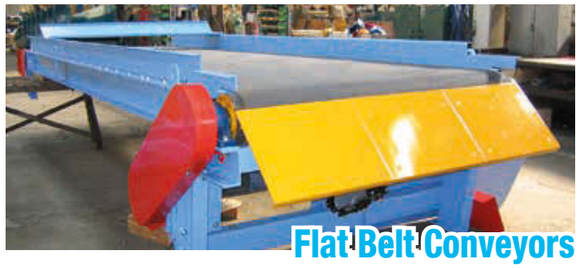

Flat Belt Conveyors

Universal Conveyors' flat belt conveyors are available as standard units or can be designed to suit specific applications. Individual conveyors can be arranged as inclined, horizontal or as a combination & can be incorporated to form part of a complete handling system. Fixed or variable speed units are available.



Radial Troughed Belt Conveyors

Radial troughed conveyors can be used individually or incorporated in large handling systems. The radial conveyor is anchored at the tail end & enables local radial stockpiling. Radial conveyors are not confined to being ground mounted & can be incorporated in aerial structures. Large conveyors are available according to specific requirements



Stockpile & Reclaim Conveyors

Stockpile & reclaim conveyors are vital equipment in the material handling process, whether in large turnkey systems or when operated independently. The stockpile conveyor is often inclined to allow maximum stockpiling. Reclaim conveyors are integral to the stockpile & allow material to be transported from the main pile. Both types of conveyor are available in mobile & static form & can be incorporated into turnkey systems or operated as stand alone units.



Picking Stations

The Universal Conveyors' picking-station range has been designed to allow the manual grading of recycled products. Waste materials are transported through the picking section on a horizontal conveyor, from which material is sorted by hand. Graded waste is removed from the picking belt & then channelled through chutes into skips or bays located beneath the picking station.



RAP Feed Systems

RAP feed systems can be designed for inclusion within new plants or for retro-fitting into existing asphalt plants and can include features such as feed system belt conveyors and elevators for RAP transfer, or self-sealing feed chute systems for introduction of RAP materials into a mixer and/or elevator.

Conveyor Components

Universal Conveyors is a market leader in the manufacture & supply of conveyor idlers, transomes and drums.

Standard products from our Multitrough & Unitrough range are available from stock & we also offer a competitively priced replacement roller service. A full range of conveyor drums is also manufactured & full technical support is provided.



Standard Roller Features

- Heavy duty, rugged construction for all bulk handling applications.
- Precision engineered to strict tolerances and fit
- Low starting and frictional resistance for efficiency and power savings
- Hermetically sealed
- Maintenance free
- Excellent low eccentricity for smooth running
- Low noise, even at high speeds



Material Specification

Tubes:	To BS 6323 Part 5 ERW1 / DIN2394 Material - St 37 DIN 17100 (63/76/89/102/127 Diameter)
Shafts:	To BS 970 Material - 230M07 Free Cutting
Housing & Shield:	AISI-1020 CRS-ST12
Bearing Assembly:	Rear Lip Seal – Polyurethane Bearing – Deep Groove Precision Ball Bearings (6204/6205/6206) AISI-52100 100CR6 + shields both sides
Finish:	Single coat of black primer paint OR grey primer paint

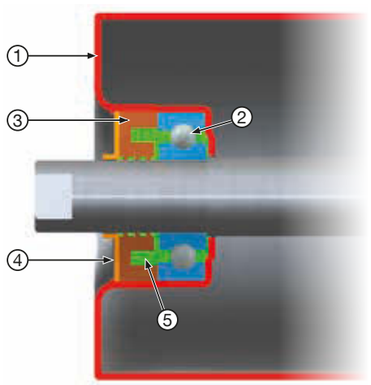

1. Pressed steel bearing housing
2. Deep groove ball bearing
3. Polyurethane multi-lip shaft seal
4. Pressed steel assembly retaining washer
5. Grease - Fuchs Renolit Aqua 2

Standard Roller Sizes

Roller Type	Roller Diameter (mm)	Tube Thickness (mm)	Shaft Diameter (mm)	Bearing Type
UCC1	63.5	3.2 & 3	20	6204
	76	3		
	89			
	102	2.9		
UCC2	3.2 & 3	3.2 & 3	25 & 27	6205
	76	3		
	89			
	102	2.9		
	108	3.5		
	127	3.2		
	133	4		
	159	4.5		
UCC3	89	3	32	6206
	102	2.9		
	108	3.5		
	127	3.2		
	133	4		
	159	4.5		

Other diameters and tube thicknesses are available on request

Manufacturing Process

Universal conveyor idlers are manufactured from accurately cut steel tubes with fully welded, pressed steel bearing housings at each end, pre-assembled with high quality, deep grooved bearings and flame retardant multi-lip seals.

Both the bearing and seal housings are packed with Fuchs Remolit Aqua 2 water resistant grease to lubricate and protect from the ingress of harmful material.

Using the latest developments in modern machinery all Universal rollers are manufactured to the highest standard meeting BS and ISO recommendations.

Quality control checks are made to ensure that rollers are well within the tolerances set by both our own and relevant British Standards.

Bearing Capacity - Idler bearings are designed to provide a minimum operating life of 30,000 hours.



Troughs

Universal Conveyors range of troughing idlers have end supporting wing rollers with all rollers interchangeable and comply with ISO and BS recommendations.

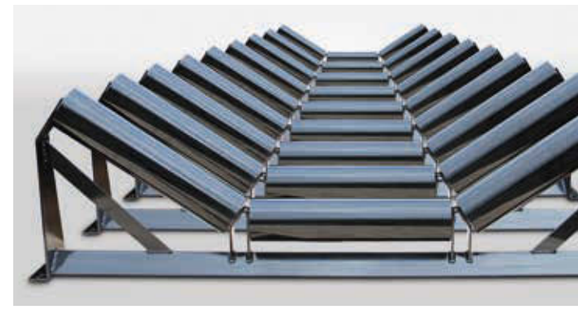

Disc Returns

For applications where material is liable to build up on the idlers, both troughing and return disc idlers are available.



Impact Rollers

The Universal range of impact rollers are designed to not only protect the rollers from the impact of material falling onto the belt at load points but also to help cushion impacts on the belt itself to extend its operating life.



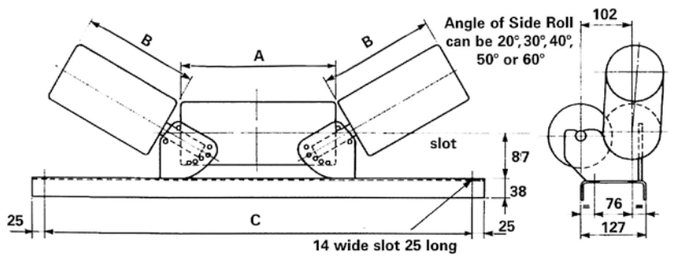



3 Roll Transome Type

Belt Width (mm)	Dimensions			Transome (Ref. No.)	Transome Sets 102mm Dia. Rollers (Ref No.)	Centre Roller (Ref. No.)	Side Roller (Ref. No.)	Transome Sets 127mm Dia. Rollers (Ref. No.)	Centre Roller (Ref. No.)	Side Roller (Ref. No.)
	A (mm)	B (mm)	C (mm)		102mm Diameter Troughing Idlers			127mm Diameter Troughing Idlers		
300 - 350	152	127	584	12LT	AD12T	D6CRXX	D5SRXX	AE12T	E6CR25	E5SR25
400	152	178	635	16LT	AD16T	D6CRXX	D7SRXX	AE16T	E6CR25	E7SR25
450	203	178	686	18LT	AD18T	D8CRXX	D7SRXX	AE18T	E8CR25	E7SR25
500	203	203	737	20LT	AD20T	D8CRXX	D8SRXX	AE20T	E8CR25	E8SR25
600	305	203	838	24LT	AD24T	D12CRXX	D8SRXX	AE24T	E12CR25	E8SR25
650	356	203	889	26LT	AD26T	D14CRXX	D8SRXX	AE26T	E14CR25	E8SR25
750	356	254	991	30LT	AD30T	D14CRXX	D10SRXX	AE30T	E14CR25	E10SR25
800	406	254	1041	32LT	AD32T	D16CRXX	D10SRXX	AE32T	E16CR25	E10SR25
900	508	254	1143	36LT	AD36T	D20CRXX	D10SRXX	AE36T	E20CR25	E10SR25
1000	558	279	1240	40LT	AD40T	D22CRXX	D11SRXX	AE40T	E22CR25	E11SR25

XX = Spindle diameter

1. 102ø Rollers can be supplied with 20 or 25ø spindles
2. 127ø Rollers can only be supplied with 25ø spindles

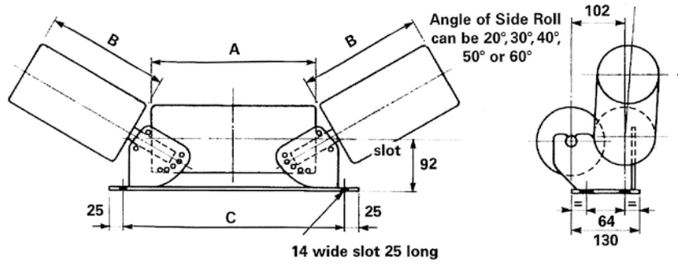



3 Roll Baseplate Type

Belt Width (mm)	Dimensions			Baseplate (Ref. No.)	Baseplate Sets 102mm Dia. Rollers (Ref No.)	Centre Roller (Ref. No.)	Side Roller (Ref. No.)	Baseplate Sets 127mm Dia. Rollers (Ref. No.)	Centre Roller (Ref. No.)	Side Roller (Ref. No.)
	A (mm)	B (mm)	C (mm)		102mm Diameter Troughing Idlers			127mm Diameter Troughing Idlers		
300 - 350	152	127	254	12B	AD12B	D6CRXX	D5SRXX	AE12B	E6CR25	E5SR25
400	152	178	305	16B	AD16B	D6CRXX	D7SRXX	AE16B	E6CR25	E7SR25
450	203	178	305	18B	AD18B	D8CRXX	D7SRXX	AE18B	E8CR25	E7SR25
500	203	203	330	20B	AD20B	D8CRXX	D8SRXX	AE20B	E8CR25	E8SR25
600	305	203	406	24B	AD24B	D12CRXX	D8SRXX	AE24B	E12CR25	E8SR25
650	356	203	483	26B	AD26B	D14CRXX	D8SRXX	AE26B	E14CR25	E8SR25
750	356	254	483	30B	AD30B	D14CRXX	D10SRXX	AE30B	E14CR25	E10SR25
800	406	254	533	32B	AD32B	D16CRXX	D10SRXX	AE32B	E16CR25	E10SR25
900	508	254	635	36B	AD36B	D20CRXX	D10SRXX	AE36B	E20CR25	E10SR25
1000	558	279	685	40B	AD40B	D22CRXX	D11SRXX	AE40B	E22CR25	E11SR25

XX = Spindle diameter

1. 102ø Rollers can be supplied with 20 or 25ø spindles
2. 127ø Rollers can only be supplied with 25ø spindles

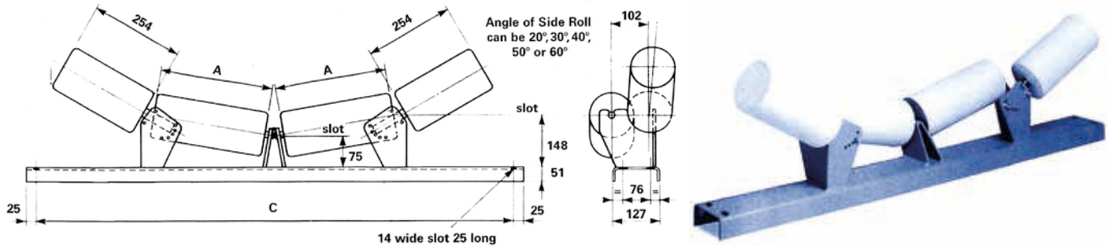

4 Roll Transome Type

Belt Width (mm)	Dimensions		Transome (Ref. No.)	102mm Diameter Troughing Idlers			127mm Diameter Troughing Idlers		
	A (mm)	C (mm)		Transome Sets 102mm Dia. Rollers (Ref No.)	Centre Roller (Ref. No.)	Side Roller (Ref. No.)	Transome Sets 127mm Dia. Rollers (Ref. No.)	Centre Roller (Ref. No.)	Side Roller (Ref. No.)
1000 - 1050	305	1295	42LT	AD42T	D12CR**XX**	D10SR**XX**	AE42T	E12CR25	E10SR25
1200	406	1448	48LT	AD48T	D16CR**XX**	D10SR**XX**	AE48T	E16CR25	E10SR25
1400	457	1600	54LT	AD54T	D18CR**XX**	D10SR**XX**	AE54T	E18CR25	E10SR25
1500	559	1753	60LT	AD60T	D22CR**XX**	D10SR**XX**	AE60T	E22CR25	E10SR25

XX = Spindle diameter

1. 102ø Rollers can be supplied with 20 or 25ø spindles
2. 127ø Rollers can only be supplied with 25ø spindles

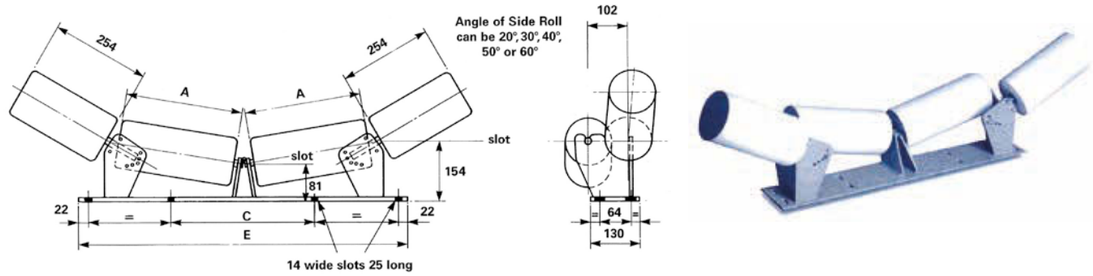

4 Roll Baseplate Type

Belt Width (mm)	Dimensions			Baseplate (Ref. No.)	102mm Diameter Troughing Idlers			127mm Diameter Troughing Idlers		
	A (mm)	C (mm)	E (mm)		Baseplate Sets 102mm Dia. Rollers (Ref No.)	Centre Roller (Ref. No.)	Side Roller (Ref. No.)	Baseplate Set 127mm Dia. Rollers (Ref. No.)	Centre Roller (Ref. No.)	Side Roller (Ref. No.)
1000 - 1050	305	367	813	42B	AD42B	D12CR**XX**	D10SR**XX**	AE42B	E12CR25	E10SR25
1200	406	545	1016	48B	AD48B	D16CR**XX**	D10SR**XX**	AE48B	E16CR25	E10SR25
1400	457	697	1118	54B	AD54B	D18CR**XX**	D10SR**XX**	AE54B	E18CR25	E10SR25
1500	559	849	1321	60B	AD60B	D22CR**XX**	D10SR**XX**	AE60B	E22CR25	E10SR25

XX = Spindle diameter

1. 102ø Rollers can be supplied with 20 or 25ø spindles
2. 127ø Rollers can only be supplied with 25ø spindles

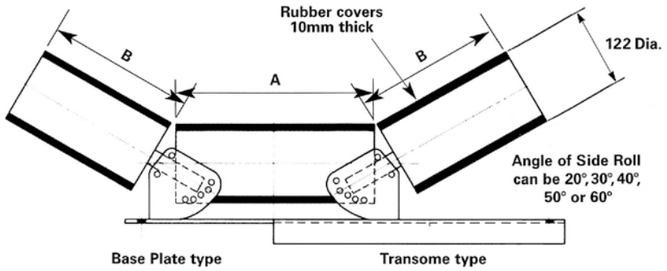

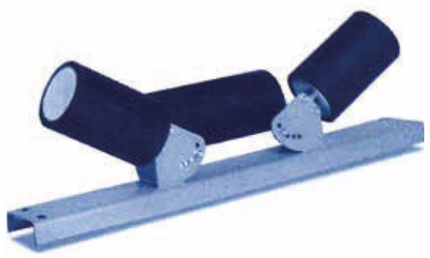

3 Roll Rubber Covered Troughing Idlers

Belt Width (mm)	Dimensions A (mm)	Dimensions B (mm)	Centre Roller (Ref. No.)	Side Roller (Ref. No.)	3 Roll Rubber Covered Transome Troughing Idlers: Transome Type / Sets (Ref No.)	3 Roll Rubber Covered Transome Troughing Idlers: Transome (Ref. No.)	3 Roll Rubber Covered Baseplate Troughing Idlers: Baseplate Type / Sets (Ref No.)	3 Roll Rubber Covered Baseplate Troughing Idlers: Baseplate (Ref. No.)
400	152	178	D6CR**XX**RC	D7SR**XX**RC	RT16T	16LT	RT16B	16B
450	203	178	D8CR**XX**RC	D7SR**XX**RC	RT18T	18LT	RT18B	18B
500	203	203	D8CR**XX**RC	D8SR**XX**RC	RT20T	20LT	RT20B	20B
600	305	203	D12CR**XX**RC	D8SR**XX**RC	RT24T	24LT	RT24B	24B
650	356	203	D14CR**XX**RC	D8SR**XX**RC	RT26T	26LT	RT26B	26B
750	356	254	D14CR**XX**RC	D10SR**XX**RC	RT30T	30LT	RT30B	30B
800	406	254	D16CR**XX**RC	D10SR**XX**RC	RT32T	32LT	RT32B	32B
900	508	254	D20CR**XX**RC	D10SR**XX**RC	RT36T	36LT	RT36B	36B
1000	558	279	D22CR**XX**RC	D11SR**XX**RC	RT40T	40LT	RT40B	40B

XX = Spindle diameter

1. 122ø Rubber covered rollers can be supplied with 20 or 25ø spindles

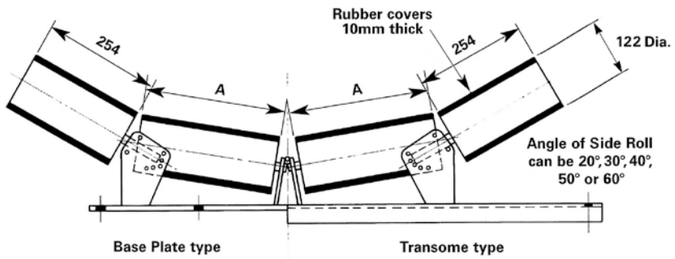



4 Roll Rubber Covered Troughing Sets

Belt Width (mm)	Dimensions A (mm)	Centre Roller (Ref. No.)	Side Roller (Ref. No.)	4 Roll Rubber Covered Transome Troughing Idlers: Transome Type / Sets (Ref No.)	4 Roll Rubber Covered Transome Troughing Idlers: Transome (Ref. No.)	4 Roll Rubber Covered Baseplate Troughing Idlers: Baseplate Type / Sets (Ref No.)	4 Roll Rubber Covered Baseplate Troughing Idlers: Baseplate (Ref. No.)
1000 - 1050	305	D12CR**XX**RC	D10SR**XX**RC	RT42T	42LT	RT42B	42B
1200	406	D16CR**XX**RC	D10SR**XX**RC	RT48T	48LT	RT48B	48B
1400	457	D18CR**XX**RC	D10SR**XX**RC	RT54T	54LT	RT54B	54B
1500	559	D22CR**XX**RC	D10SR**XX**RC	RT60T	60LT	RT60B	60B

XX = Spindle diameter

1. 122ø Rubber covered rollers can be supplied with 20 or 25ø spindles

Multitrough

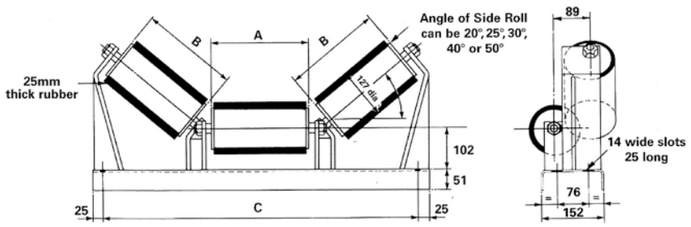

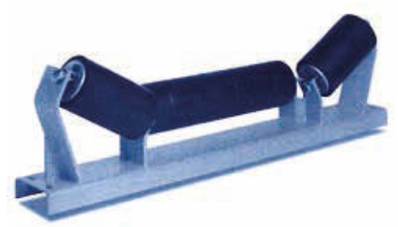

3 Roll Impact Troughing Sets

				127mm Diameter Troughing Idlers			
Belt Width (mm)	Dimensions			Transome Sets (Ref No.)	Centre Roller (Ref. No.)	Side Roller (Ref. No.)	Transome (Ref. No.)
	A (mm)	B (mm)	C (mm)				
600	235	235	838	HD24œ	HD9.25CR25	HD9.25SR25	24LTHDœ
650	311	235	889	HD26œ	HD12.25CR25	HD9.25SR25	26LTHDœ
750	384	235	991	HD30œ	HD15.12CR25	HD9.25SR25	30LTHDœ
800	460	235	1041	HD32œ	HD18.12CR25	HD9.25SR25	32LTHDœ
900	533	235	1143	HD36œ	HD21.00CR25	HD9.25SR25	36LTHDœ
1000	610	235	1240	HD40œ	HD24.00CR25	HD9.25SR25	40LTHDœ

œ = Angle of side roller (fixed at manufacture)

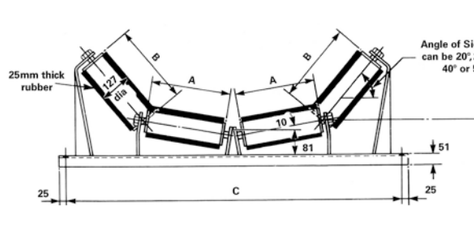



4 Roll Impact Troughing Sets

				127mm Diameter Troughing Idlers			
Belt Width (mm)	Dimensions			Transome Sets (Ref No.)	Centre Roller (Ref. No.)	Side Roller (Ref. No.)	Transome (Ref. No.)
	A (mm)	B (mm)	C (mm)				
1000	311	311	1295	HD42œ	HD12.25CR-425	HD12.25SR25	42LTHDœ
1200	384	311	1448	HD48œ	HD15.12CR-425	HD12.25SR25	48LTHDœ
1400	384	384	1600	HD54œ	HD15.12CR-425	HD15.12SR25	54LTHDœ
1500	460	384	1753	HD60œ	HD18.12CR-425	HD15.12SR25	60LTHDœ

œ = Angle of side roller (fixed at manufacture)

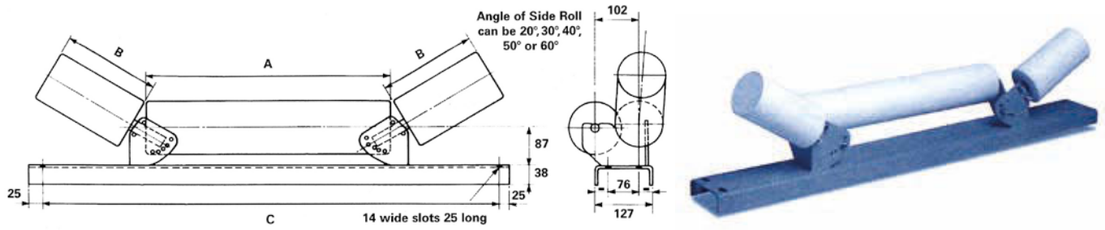

3 Roll Transome Type Picking Idler Sets

Belt Width (mm)	Dimensions			Transome (Ref. No.)	102mm Diameter Troughing Idlers			127mm Diameter Troughing Idlers		
	A (mm)	B (mm)	C (mm)		Transome Sets 102mm Dia. Rollers (Ref No.)	Centre Roller (Ref. No.)	Side Roller (Ref. No.)	Transome Sets 127mm Dia. Rollers (Ref. No.)	Centre Roller (Ref. No.)	Side Roller (Ref. No.)
750	457	203	991	30LTP	AD30TP	D18CR**XX**	D8SR**XX**	AE30TP	E18CR25	E8SR25
800	508	203	1041	32LTP	AD32TP	D20CR**XX**	D8SR**XX**	AE32TP	E20CR25	E8SR25
900	610	203	1143	36LTP	AD36TP	D24CR**XX**	D8SR**XX**	AE36TP	E24CR25	E8SR25
1000	711	203	1240	40LTP	AD40TP	D28CR**XX**	D8SR**XX**	AE40TP	E28CR25	E8SR25
1050	762	203	1295	42LTP	AD42TP	D30CR**XX**	D8SR**XX**	AE42TP	E30CR25	E8SR25
1200	914	203	1448	48LTP	AD48TP	D36CR**XX**	D8SR**XX**	AE48TP	E36CR25	E8SR25
1400	1067	203	1600	54LTP	AD54TP	D42CR**XX**	D8SR**XX**	AE54TP	E42CR25	E8SR25
1500	1219	203	1753	60LTP	AD60TP	D48CR**XX**	D8SR**XX**	AE60TP	E48CR25	E8SR25

XX = Spindle diameter

1. 102ø Rollers can be supplied with 20 or 25ø spindles
2. 127ø Rollers can only be supplied with 25ø spindles
3. Transomes can also be supplied with 122mm dia. rubber covered rollers

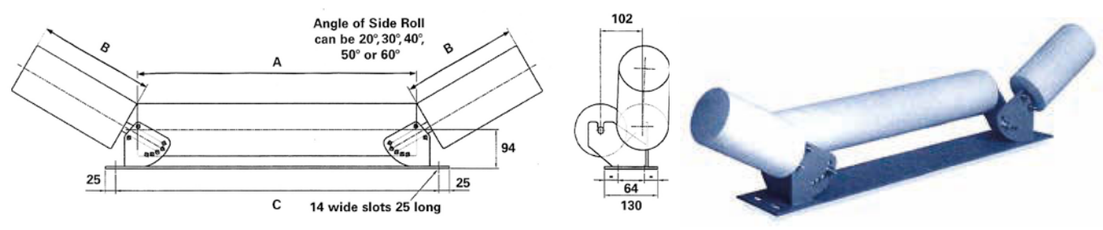

3 Roll Baseplate Type Picking Idler Sets

Belt Width (mm)	Dimensions			Baseplate (Ref. No.)	102mm Diameter Troughing Idlers			127mm Diameter Troughing Idlers		
	A (mm)	B (mm)	C (mm)		Baseplate Sets 102mm Dia. Rollers (Ref No.)	Centre Roller (Ref. No.)	Side Roller (Ref. No.)	Baseplate Sets 127mm Dia. Rollers (Ref. No.)	Centre Roller (Ref. No.)	Side Roller (Ref. No.)
750	457	203	584	30BP	AD30BP	D18CR**XX**	D8SR**XX**	AE30BP	E18CR25	E8SR25
800	508	203	635	32BP	AD32BP	D20CR**XX**	D8SR**XX**	AE32BP	E20CR25	E8SR25
900	610	203	737	36BP	AD36BP	D24CR**XX**	D8SR**XX**	AE36BP	E24CR25	E8SR25
1000	711	203	838	40BP	AD40BP	D28CR**XX**	D8SR**XX**	AE40BP	E28CR25	E8SR25
1050	762	203	889	42BP	AD42BP	D30CR**XX**	D8SR**XX**	AE42BP	E30CR25	E8SR25
1200	914	203	1041	48BP	AD48BP	D36CR**XX**	D8SR**XX**	AE48BP	E36CR25	E8SR25
1400	1067	203	1194	54BP	AD54BP	D42CR**XX**	D8SR**XX**	AE54BP	E42CR25	E8SR25
1500	1219	203	1346	60BP	AD60BP	D48CR**XX**	D8SR**XX**	AE60BP	E48CR25	E8SR25

XX = Spindle diameter

1. 102ø Rollers can be supplied with 20 or 25ø spindles
2. 127ø Rollers can only be supplied with 25ø spindles
3. Transomes can also be supplied with 122mm dia. rubber covered rollers

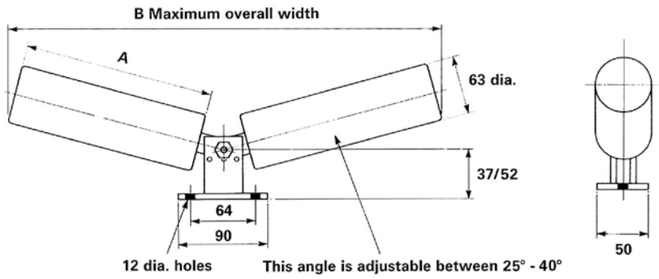



2 Roll Troughing Idler Sets

Belt Width (mm)	Dimensions		Transome Sets Ref. No.	63.5mm Diameter Adjustable Angle Troughing Idlers	
	A (mm)	B (mm)		Rollers (Ref. No.)	2 Roll Bracket (Ref. No.)
250	132	311	B 10B	B5TR25	2-ROLL-BRKT
300	152	362	B 12B	B6TR25	2-ROLL-BRKT
350	178	413	B 14B	B7TR25	2-ROLL-BRKT
400	203	464	B 16B	B8TR25	2-ROLL-BRKT

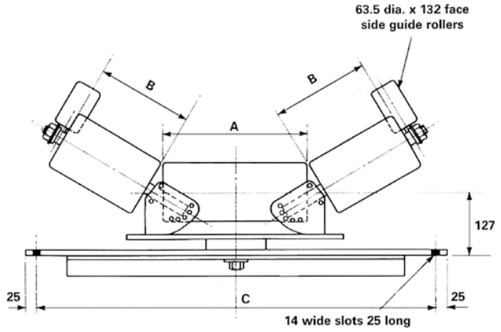

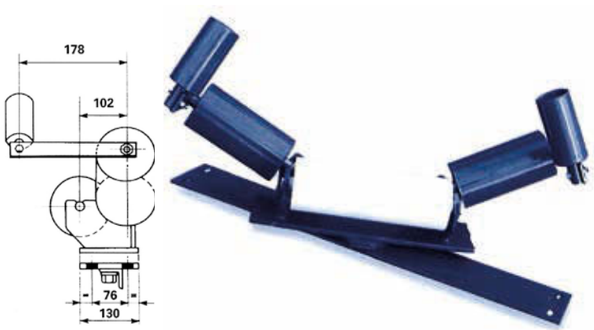

Self Aligning Idler Sets

Belt Width (mm)	Dimensions			Transome (Ref. No.)	102mm Diameter Troughing Idlers			127mm Diameter Troughing Idlers		
	A (mm)	B (mm)	C (mm)		Transome Sets 102mm Dia. Rollers (Ref No.)	Centre Roller (Ref. No.)	Side Roller (Ref. No.)	Transome Sets 127mm Dia. Rollers (Ref. No.)	Centre Roller (Ref. No.)	Side Roller (Ref. No.)
300 - 350	152	127	584	12SA-T	AD12S	D6SR**XX**	D5SR25SE	-	-	-
400	152	178	635	16SA-T	AD16S	D6CR**XX**	D7SR25SE	AE16S	E6CR25	E7SR25SE
450	203	178	686	18SA-T	AD18S	D8CR**XX**	D7SR25SE	AE18S	E8CR25	E7SR25SE
500	203	203	737	20SA-T	AD20S	D8CR**XX**	D8SR25SE	AE20S	E8CR25	E8SR25SE
600	305	203	838	24SA-T	AD24S	D12CR**XX**	D8SR25SE	AE24S	E12CR25	E8SR25SE
650	356	203	889	26SA-T	AD26S	D14CR**XX**	D8SR25SE	AE26S	E14CR25	E8SR25SE
750	356	254	991	30SA-T	AD30S	D14CR**XX**	D10SR25SE	AE30S	E14CR25	E10SR25SE
800	406	254	1041	32SA-T	AD32S	D16CR**XX**	D10SR25SE	AE32S	E16CR25	E10SR25SE
900	508	254	1143	36SA-T	AD36S	D20CR**XX**	D10SR25SE	AE36S	E20CR25	E10SR25SE
1000	558	279	1240	40SA-T	AD40S	D22CR**XX**	D11SR25SE	AE40S	E22CR25	E11SR25SE

XX = Spindle diameter

1. 102ø Centre rollers can be supplied with 20 or 25ø spindles
2. 102ø Side and all 127ø rollers can only be supplied with 25ø spindles
3. 63.5 dia. Side guide roller ref = BSGR25M
4. Side guide roller brackets (pair) ref = SA-BRKT

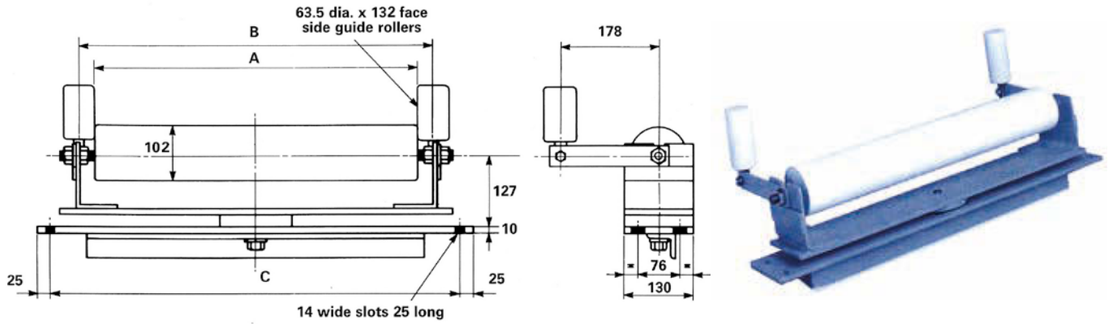

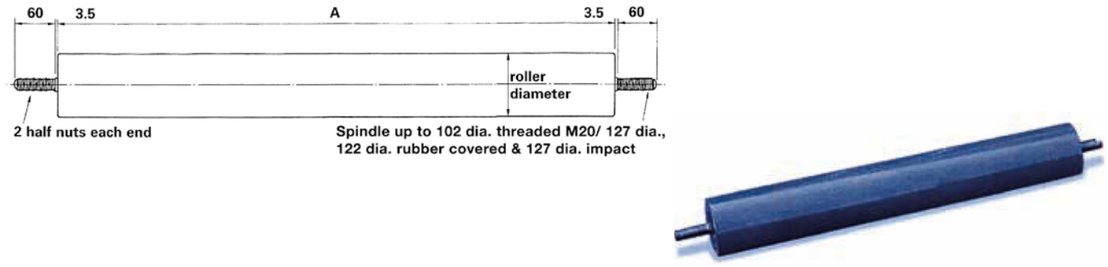

Self Aligning Return Idlers

Belt Width (mm)	Dimensions			102mm Diameter Self Aligning Return Idlers		
	A (mm)	B (mm)	C (mm)	Transome Sets (Ref. No.)	Return Roller (Ref. No.)	Transome (Ref. No.)
300 - 350	432	546	584	DP12S	DP12XX	12SA-R
400	483	597	635	DP16S	DP16XX	16SA-R
450	533	648	686	DP18S	DP18XX	18SA-R
500	584	699	737	DP20S	DP20XX	20SA-R
600	686	800	838	DP24S	DP24XX	24SA-R
650	737	851	889	DP26S	DP26XX	26SA-R
750	838	953	991	DP30S	DP30XX	30SA-R
800	889	1003	1041	DP32S	DP32XX	32SA-R
900	991	1105	1143	DP36S	DP36XX	36SA-R
1000	1092	1205	1240	DP40S	DP40XX	40SA-R

XX = Spindle diameter

1. 102ø Return rollers can be supplied with 20 or 25ø spindles
2. 63.5 dia. Side guide roller ref = BSGR25M
3. Side guide roller brackets (pair) ref = SA-BRKT

Return Idlers

Belt Width (mm)	Dimensions A (mm)	63mm Dia. (Ref No.)	76mm Dia. (Ref No.)	102mm Dia. (Ref No.)	127mm Dia. (Ref No.)	Rubber Covered Type 122mm Dia. (Ref No.)	Impact Type 127mm Dia. (Ref. No.)
250	330	BP10XX	-	-	-	-	-
300	432	BP12XX	CP12XX	DP12XX	EP12H25	RP12H25	-
350	432	BP12XX	CP12XX	DP12XX	EP12H25	RP12H25	-
400	483	BP16XX	CP16XX	DP16XX	EP16H25	RP16H25	-
450	533	BP18XX	CP18XX	DP18XX	EP18H25	RP18H25	-
500	584	BP20XX	CP20XX	DP20XX	EP20H25	RP20H25	-
600	686	BP24XX	CP24XX	DP24XX	EP24H2525	RP24H25	HP2425
650	737	BP26XX	CP26XX	DP26XX	EP26H25	RP26H25	HP2625
750	838	BP30XX	CP30XX	DP30XX	EP30H25	RP30H25	HP3025
800	889	BP32XX	CP32XX	DP32XX	EP32H25	RP32H25	HP3225
900	991	BP36XX	CP36XX	DP36XX	EP36H25	RP36H25	HP3625
1000	1092	BP40XX	CP40XX	DP40XX	EP40H25	RP40H25	HP4025
1050	1143	BP42XX	CP42XX	DP42XX	EP42H25	RP42H25	HP4225
1200	1295	BP48XX	CP48XX	DP48XX	EP48H25	RP48H25	HP4825
1400	1448	BP5425	CP54XX	DP54XX	EP54H25	RP54H25	HP5425
1500	1600	BP6025	CP60XX	DP60XX	EP60H25	RP60H25	HP6025

XX = Spindle diameter

1. 63.5, 76 & 102ø Rollers upto and including 1200 wide can be supplied with 20 or 25ø spindles

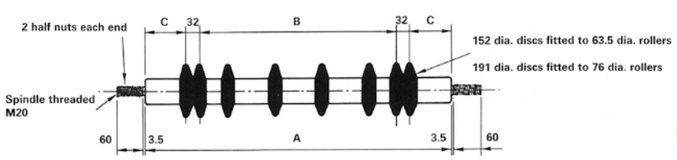

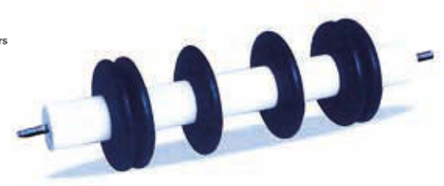

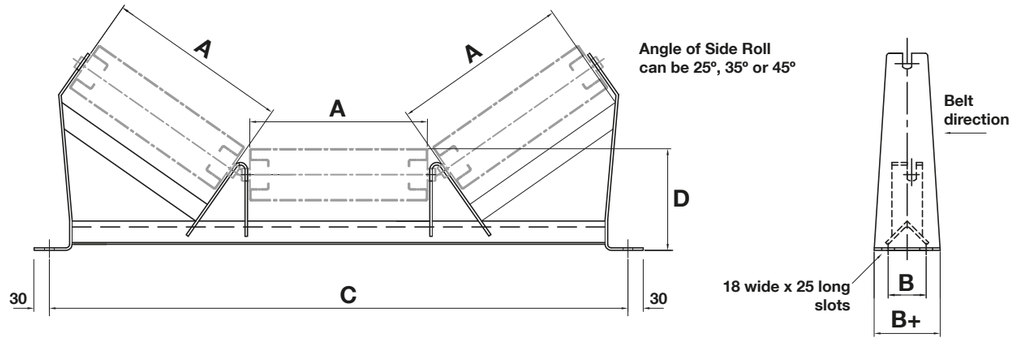

Disc Return Idlers

Belt Width (mm)	Dimensions			152mm Dia. Discs (Ref No.)	191mm Dia. Discs (Ref. No.)
	A (mm)	B (No. of Pitches)	C (mm)		
300	432	2	114	6RDBP12**XX**	7RDCP12**XX**
350	432	2	114	6RDBP12**XX**	7RDCP12**XX**
400	483	2	114	6RDBP16**XX**	7RDCP16**XX**
450	533	2	114	6RDBP18**XX**	7RDCP18**XX**
500	584	3	114	6RDBP20**XX**	7RDCP20**XX**
600	686	3	114	6RDBP24**XX**	7RDCP24**XX**
650	737	4	114	6RDBP26**XX**	7RDCP26**XX**
750	838	4	114	6RDBP30**XX**	7RDCP30**XX**
800	889	4	114	6RDBP32**XX**	7RDCP32**XX**
900	991	5	114	6RDBP36**XX**	7RDCP36**XX**
1000	1092	6	114	6RDBP40**XX**	7RDCP40**XX**
1050	1143	6	114	6RDBP42**XX**	7RDCP42**XX**
1200	1295	7	114	6RDBP48**XX**	7RDCP48**XX**
1400	1448	8	114	6RDBP54**XX**	7RDCP54**XX**
1500	1600	9	114	6RDBP60**XX**	7RDCP60**XX**

XX = Spindle diameter

1. Disc return rollers upto and including 1200 wide can be supplied with 20 or 25ø spindles

3 Roll Troughing Idler Sets With Inverted Angle Transome

						102mm Diameter Troughing Idlers		
Belt Width (mm)	Dimensions				D (mm)	Transome Sets (Ref No.)	Roller (Ref No.)	Transome (Ref No.)
	A (mm)	B (mm)	B+ (mm)	C (mm)				
400	160	75	130	640	200	MDA400/œ	D16025	DA400/œ
500	200	75	130	740	200	MDA500/œ	D20025	DA500/œ
600	240	75	130	840	200	MDA600/œ	D24025	DA600/œ
650	250	75	130	890	200	MDA650/œ	D25025	DA650/œ
750	295	75	130	990	200	MDA750/œ	D29525	DA750/œ
800	315	75	130	1040	200	MDA800/œ	D31525	DA800/œ
900	350	75	130	1140	200	MDA900/œ	D35025	DA900/œ
1000	380	75	130	1240	200	MDA1000/œ	D38025	DA1000/œ
1050	410	75	130	1300	200	MDA1050/œ	D41025	DA1050/œ
1200	465	100	170	1450	215	MDA1200/œ	D46525	DA1200/œ
1350	530	100	170	1600	215	MDA1350/œ	D53025	DA1350/œ
1400	530	100	170	1650	215	MDA1400/œ	D53025	DA1400/œ
1500	575	100	170	1800	215	MDA1500-S/œ	D57525S	DA1500/œ
1600	600	100	170	1900	215	MDA1600-S/œ	D60025S	DA1600/œ

All roller lengths conform to BS and ISO Standards except for 575

1. /œ = Angle of side rollers, 25°, 35° or 45°
2. Suffix -S after roller or transome set ref. indicates heavier duty rollers with stepped spindles (i.e. 27 dia. to 25 dia. at bearings)
3. Stepped spindles can also be offered for other sizes on request

3 Roll Troughing Idler Sets With Inverted Angle Transome (Continued)

Belt Width (mm)	Dimensions				122mm Diameter Rubber Covered Troughing Idlers				127mm Diameter Troughing Idlers			
	A (mm)	B (mm)	B+ (mm)	C (mm)	D (mm)	Transome Sets (Ref No.)	Roller (Ref No.)	Transome (Ref No.)	D (mm)	Transome Sets (Ref No.)	Roller (Ref No.)	Transome (Ref No.)
400	160	75	130	640	222	MRA400/œ	R16025	EA400/œ	225	MEA400/œ	E16025	EA400/œ
500	200	75	130	740	222	MRA500/œ	R20025	EA500/œ	225	MEA500/œ	E20025	EA500/œ
600	240	75	130	840	222	MRA600/œ	R24025	EA600/œ	225	MEA600/œ	E24025	EA600/œ
650	250	75	130	890	222	MRA650/œ	R25025	EA650/œ	225	MEA650/œ	E25025	EA650/œ
750	295	75	130	990	222	MRA750/œ	R29525	EA750/œ	225	MEA750/œ	E29525	EA750/œ
800	315	75	130	1040	222	MRA800/œ	R31525	EA800/œ	225	MEA800/œ	E31525	EA800/œ
900	350	75	130	1140	222	MRA900/œ	R35025	EA900/œ	225	MEA900/œ	E35025	EA900/œ
1000	380	75	130	1240	222	MRA1000/œ	R38025	EA1000/œ	225	MEA1000/œ	E38025	EA1000/œ
1050	410	75	130	1300	222	MRA1050/œ	R41025	EA1050/œ	225	MEA1050/œ	E41025	EA1050/œ
1200	465	100	170	1450	237	MRA1200/œ	R46525	EA1200/œ	240	MEA1200/œ	E46525	EA1200/œ
1350	530	100	170	1600	237	MRA1350/œ	R53025	EA1350/œ	240	MEA1350/œ	E53025	EA1350/œ
1400	530	100	170	1650	237	MRA1400/œ	R53025	EA1400/œ	240	MEA1400/œ	E53025	EA1400/œ
1500	575	100	170	1800	237	MRA1500-S/œ	R57525S	EA1500/œ	240	MEA15000-S/œ	E57525S	EA1500/œ
1600	600	100	170	1900	237	MRA1600-S/œ	R60025S	EA1600/œ	240	MEA16000-S/œ	E60025S	EA1600/œ

All roller lengths conform to BS and ISO Standards except for 575

1. /œ = Angle of side rollers, 25°, 35° or 45°
2. Suffix -S after roller or transome set ref. indicates heavier duty rollers with stepped spindles (i.e. 27 dia. to 25 dia. at bearings)
3. Stepped spindles can also be offered for other sizes on request

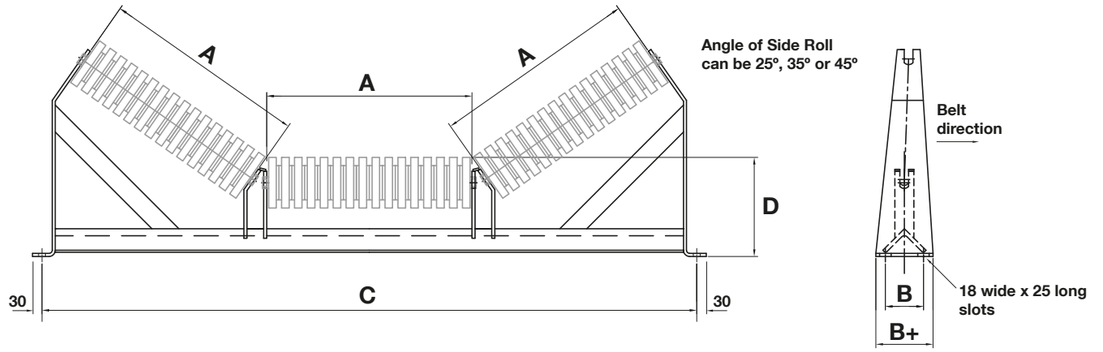

3 Roll Impact Sets With Inverted Angle Transome

Belt Width (mm)	Dimensions				108mm Diameter Impact Rollers				133mm Diameter Impact Rollers			
	A (mm)	B (mm)	B+ (mm)	C (mm)	D (mm)	Transome Sets (Ref No.)	Roller (Ref No.)	Transome (Ref No.)	D (mm)	Transome Sets (Ref No.)	Roller (Ref No.)	Transome (Ref No.)
400	160	75	130	640	200	MDIA400/œ	UCI2108ST2-160	DIA400/œ	225	MEIA400/œ	UCI2133ST2-160	EIA400/œ
500	200	75	130	740	200	MDIA500/œ	UCI2108ST2-200	DIA500/œ	225	MEIA500/œ	UCI2133ST2-200	EIA500/œ
600	240	75	130	840	200	MDIA600/œ	UCI2108ST2-240	DIA600/œ	225	MEIA600/œ	UCI2133ST2-240	EIA600/œ
650	250	75	130	890	200	MDIA650/œ	UCI2108ST2-250	DIA650/œ	225	MEIA650/œ	UCI2133ST2-250	EIA650/œ
750	295	75	130	990	200	MDIA750/œ	UCI2108ST2-295	DIA750/œ	225	MEIA750/œ	UCI2133ST2-295	EIA750/œ
800	315	75	130	1040	200	MDIA800/œ	UCI2108ST2-315	DIA800/œ	225	MEIA800/œ	UCI2133ST2-315	EIA800/œ
900	350	75	130	1140	200	MDIA900/œ	UCI2108ST2-350	DIA900/œ	225	MEIA900/œ	UCI2133ST2-350	EIA900/œ
1000	380	75	130	1240	200	MDIA1000/œ	UCI2108ST-380	DIA1000/œ	225	MEIA1000/œ	UCI2133ST2-380	EIA1000/œ
1050	410	75	130	1300	200	MDIA1050/œ	UCI2108ST2-410	DIA1050/œ	225	MEIA1050/œ	UCI2133ST2-410	EIA1050/œ
1200	465	100	170	1450	215	MDIA1200/œ	UCI2108ST2-465	DIA1200/œ	240	MEIA1200/œ	UCI2133ST2-465	EIA1200/œ
1350	530	100	170	1600	215	MDIA1350/œ	UCI2108ST2-530	DIA1350/œ	240	MEIA1350/œ	UCI2133ST2-530	EIA1350/œ
1400	530	100	170	1650	215	MDIA1400/œ	UCI2108ST2-530	DIA1400/œ	240	MEIA1400/œ	UCI2133ST2-530	EIA1400/œ
1500	575	100	170	1800	215	MDIA1500S/œ	UCI2108ST2-575	DIA1500/œ	240	MEIA1500/œ	UCI2133ST2-575	EIA1500/œ
1600	600	100	170	1900	215	MDIA1600-S/œ	UCI2108ST2-600	DIA1600/œ	240	MEIA1600/œ	UCI2133ST2-600	EIA1600/œ

1. /œ = Angle of side rollers, 25°, 35° or 45°
2. Suffix -S after roller or transome set ref. indicates heavier duty rollers with stepped spindles (i.e. 27 dia. to 25 dia. at bearings)
3. Stepped spindles can also be offered for other sizes on request

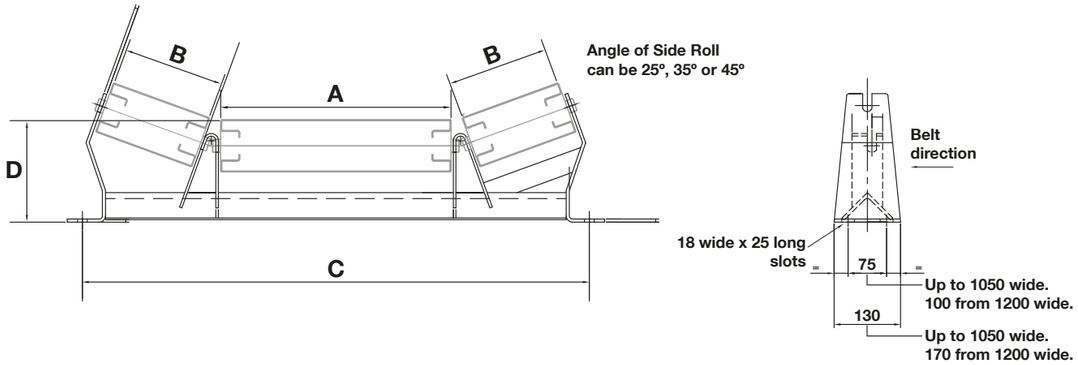

3 Roll Picking Idler Sets With Inverted Angle Transome

				102mm Diameter Picking Idler Set					127mm Diameter Picking Idler Set				
Belt Width (mm)	Dimensions A (mm)	B (mm)	C (mm)	D (mm)	Transome Sets (Ref No.)	Centre Roller (Ref No.)	Side Roller (Ref No.)	Transome (Ref No.)	D (mm)	Transome Sets (Ref No.)	Centre Roller (Ref No.)	Side Roller (Ref No.)	Transome (Ref No.)
750	450	200*	990*	200*	MDAP750/œ	D45025	D20025	DAP750/œ	225*	MEAP750/œ	E45025	E20025	EAP750/œ
800	500*	200*	1040*	200*	MDAP800/œ	D50025	D20025	DAP800/œ	225*	MEAP800/œ	E50025	E20025	EAP800/œ
900	600*	200*	1140*	200*	MDAP900/œ	D60025	D20025	DAP900/œ	225*	MEAP900/œ	E60025	E20025	EAP900/œ
1000	700*	200*	1240*	200*	MDAP1000/œ	D70025	D20025	DAP1000/œ	225*	MEAP1000/œ	E70025	E20025	EAP1000/œ
1050	760	200*	1300*	200*	MDAP1050/œ	D76025	D20025	DAP1050/œ	225*	MEAP1050/œ	E76025	E20025	EAP1050/œ
1200	910	200*	1450*	215*	MDAP1200/œ	D91025	D20025	DAP1200/œ	240*	MEAP1200/œ	E91025	E20025	EAP1200/œ
1350	1060	200*	1600	215*	MDAP1350/œ	D106025	D20025	DAP1350/œ	240*	MEAP1350/œ	E106025	E20025	EAP1350/œ
1400	1110	200*	1650	215*	MDAP1400/œ	D111025	D20025	DAP1400/œ	240*	MEAP1400/œ	E111025	E20025	EAP1400/œ
1500	1260	200*	1800	215*	MDAP1500/œ	D126025	D20025	DAP1500/œ	240*	MEAP1500/œ	E126025	E20025	EAP1500/œ
1600	1360	200*	1900*	215*	MDAP1600/œ	D136025	D20025	DAP1600/œ	240*	MEAP1600/œ	E136025	E20025	EAP1600/œ

1. Dimensions marked with astrik conform to BS and ISO standards
2. /œ = Angle of side rollers, 25°, 35° or 45°

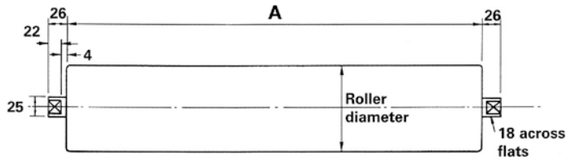



Return Idlers

Belt Width (mm)	Dimensions A (mm)	102mm Dia. (Ref No.)	127mm Dia. (Ref. No.)	102mm Dia. Roller with 10mm Thick Rubber Covering (Ref. No.)
400	500*	MDP400	MEP400	MRP400
500	600*	MDP500	MEP500	MRP500
600	700*	MDP600	MEP600	MRP600
650	750*	MDP650	MEP650	MRP650
750	900*	MDP750	MEP750	MRP750
800	950*	MDP800	MEP800	MRP800
900	1050*	MDP900	MEP900	MRP900
1000	1150*	MDP1000	MEP1000	MRP1000
1050	1200*	MDP1050	MEP1050	MRP1050
1200	1350*	MDP1200	MEP1200	MRP1200
1350	1500*	MDP1350-S	MEP1350-S	MRP1350-S
1400	1550	MDP1400-S	MEP1400-S	MRP1400-S
1500	1700	MDP1500-S	MEP1500-S	MRP1500-S
1600	1800*	MDP1600-S	MEP1600-S	MRP1600-S

1. Lengths marked with astrik conform to BS and ISO standards
2. Suffix -S after roller ref. indicates heavier duty rollers with stepped spindles (i.e. 27 dia. to 25 dia. at bearings)

Unitrough

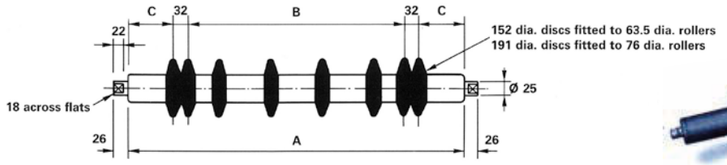



Disc Return Idlers

Belt Width (mm)	Dimensions			152mm Dia. Discs (Ref No.)	191mm Dia. Discs (Ref. No.)
	A (mm)	B (No. of Pitches)	C (mm)		
400	500*	2	122	MBP6D400	MCP7D400
500	600*	3	122	MBP6D500	MCP7D500
600	700*	3	122	MBP6D600	MCP7D600
650	750*	4	122	MBP6D650	MCP7D650
750	900*	4	147	MBP6D750	MCP7D750
800	950*	4	147	MBP6D800	MCP7D800
900	1050*	5	147	MBP6D900	MCP7D900
1000	1150*	6	147	MBP6D1000	MCP7D1000
1050	1200*	6	147	MBP6D1050	MCP7D1050
1200	1350*	7	147	MBP6D1200	MCP7D1200
1350	1500*	8	147	MBP6D1350-S	MCP7D1350-S
1400	1550	8	147	MBP6D1400-S	MCP7D1400-S
1500	1700	9	172	MBP6D1500-S	MCP7D1500-S
1600	1800*	10	172	MBP6D1600-S	MCP7D1600-S

1. Roller lengths marked with astrik conform to BS and ISO standards
2. Suffix -S after roller ref. indicates heavier duty rollers with stepped spindles (i.e. 27 dia. to 25 dia. at bearings)

Intertrough

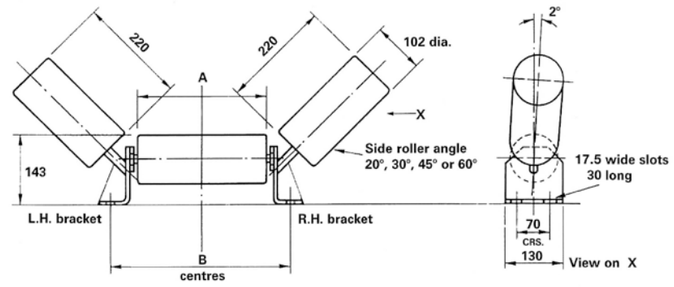



3 Roll Intertrough-type Troughing Idler Sets

Belt Width (mm)	Dimensions		102mm Diameter Troughing Idlers		
	A (mm)	B (mm)	Transome Sets (Ref. No.)	Centre Roller (Ref. No.)	Side Roller & Bracket (Ref. No.) All Angles
600	305	406	IT600/œ	L314CR	IT220SR#/œ
650	305	406	IT650/œ	L314CR	IT220SR#/œ
750	379	480	IT750/œ	L388CR	IT220SR#/œ
800	379	480	IT800/œ	L388CR	IT220SR#/œ
900	529	630	IT900/œ	L538CR	IT220SR#/œ
1000	639	740	IT1000/œ	L648CR	IT220SR#/œ
1200	863	1008	IT1200/œ	L916CR	IT220SR#/œ

1. /œ = Angle of side rollers with bracket, 20°, 30°, 40°, 50° or 60°
2. # = RH for Right hand side or LH for Left hand side

Intertrough

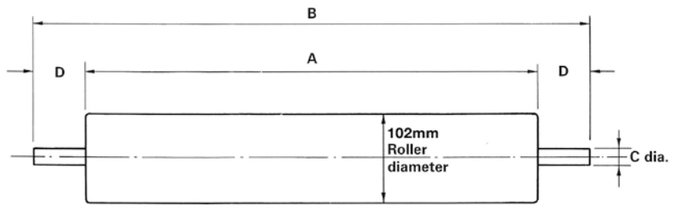



Intertrough-type Return Idlers

Belt Width (mm)	Dimensions				Ref. No.
	A (mm)	B (mm)	C (mm)	D (mm)	
600-650	710	840	20	65	ITR710
750	850	980	20	65	ITR850
800	895	1025	20	65	ITR895
900	1019	1145	20	63	ITR1019
1000	1119	1280	20	80.5	ITR1119
1050	1190	1320	20	65	ITR1190
1200	1319	1485	20	83	ITR1319
1500	1559	1700	25	70.5	ITR1559

Idlers And Special End Fixings

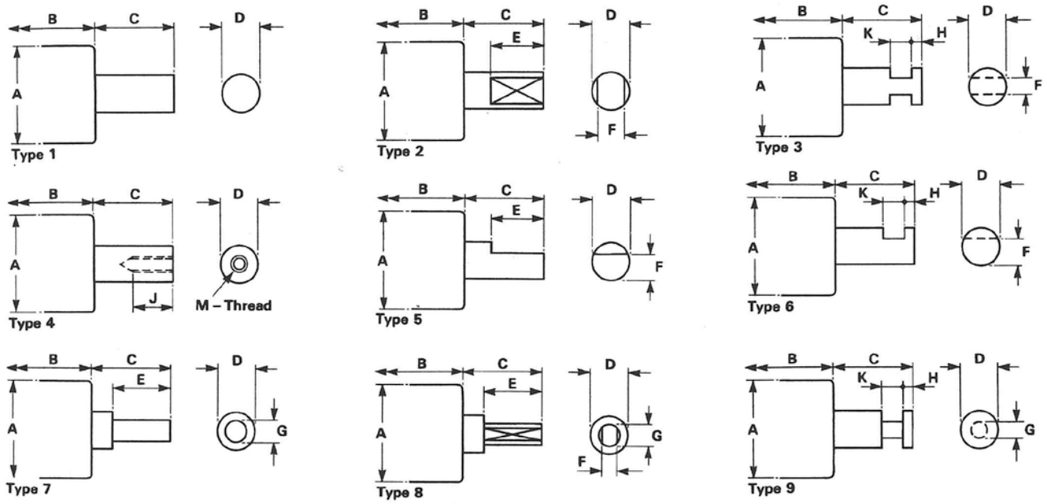

CANTILEVERED WING
Roll Type 1 (tick)

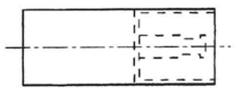

STANDARD WING ROLLER
Roll Type 2 (tick)

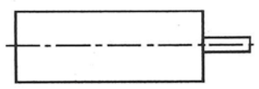

Accessories

Side Guide Rollers

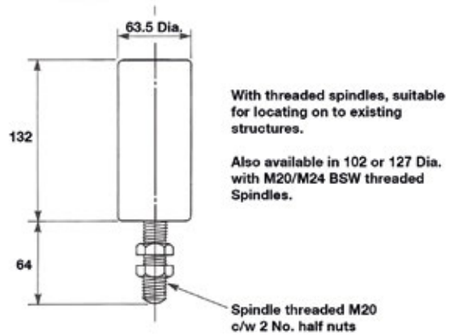

Ref. No.	Spindle Dia. (mm)
BSGR20T	20
BSGR25T	20

Multitrough Return Idler Brackets

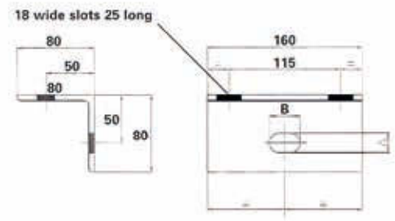

Ref. No.	A (mm)	A (mm)
M20-BRKT	21	32
M24-BRKT	27	38

Unitrough Return Idler Brackets (New & Old Types)

New Type

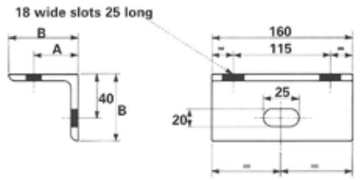

Old Type

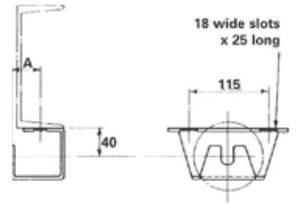

Type	Ref. No.	Belt Width (mm)	A (mm)	A (mm)
New	N1-BRKT	400 - 650	64	90
New	N2-BRKT	750 - 1600	40	70
Old	M1-BRKT	400 - 650	64	-
Old	M2-BRKT	750 - 1600	39	-

FAX BACK ORDER FORM

Please photocopy (retain this sheet for future orders) and post / fax your details for replacement rollers to suit your specification.

Customer		Delivery Address	
Date	Order No.	Quanity	Ordered by

Roller Dimensions	
A	
B	
D	

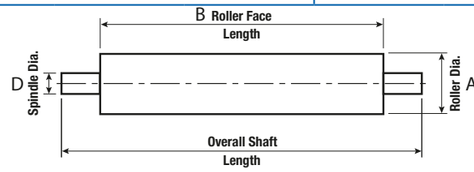

Spindle Details Please select from these shown below :-

End 1	C	E	F	G	H	J	K	M
End 2	C	E	F	G	H	J	K	M

Roller Type



www.universalconveyors.co.uk

Universal Conveyors Limited,
Viaduct Works, Canon Street, Leicester, LE4 6GH
United Kingdom
T: +44 (0) 116 266 5999
F: +44 (0) 116 344 0135
E: sales@universalconveyors.co.uk

All reasonable steps have been taken to ensure the accuracy of this publication. However, due to our policy of continual product development, Universal Conveyors Limited reserves the right to change details without prior notice. All products supplied in accordance with our standard conditions. Illustrations and photos may show optional equipment. All rights reserved. Copyright © Universal Conveyors Limited 2018.